City of Harrisonburg

Public Safety Building Parking Lot

101 North Main Street

Vicinity Map

Scale: N.T.S.

Sheet Index

Sheet Number	Sheet Title
1	Cover Sheet
2	Legend and Abbreviations
3	General Notes
4	Existing Conditions Plan
5	Demolition Plan
6	Paving and Utility Plan
7	Fence Plan
8	Pavement Marking Plan
9	Gate Profiles
10	Details 1
11	Details 2
12	Details 3
13	Details 4

Project Contacts

Project Manager	Tom Hartman	(540) 434-5928
City Engineer	Dan Rublee	(540) 432-7700
Public Works	Tom Hartman	(540) 434-5928
Public Utilities	David Gray	(540) 434-9959
Harrisonburg Electric Commission	Zach Nyce	(540) 434-5361
Verizon	Chris Click	(540) 433-7676
Columbia Gas	Chris McDonald	(540) 851-2332
Comcast XFinity	Philip Perry	(888) 266-2278

Project Description

This project is located at the Public Safety Building in Harrisonburg, Virginia. The site is bounded by N Main St on the east, W Elizabeth St on the south, N Liberty St on the west, and W Wolfe St on the north. The project consists of constructing approximately XXX LF of security fence, along with motorized gates, pedestrian gates, minor sidewalk and driveway modifications, and signing and marking. The disturbed area is estimated to be X,XXX SF.

60% Design

January 2022

Dig With CARE. Keep Virginia Safe!
- C Call 811 before you dig.
- A Allow required time for marking.
- R Respect the marks.
- E Excavate carefully.

811

COMMONWEALTH OF VIRGINIA
MATTHEW R. HUSTON
Lic. No. 037897
PROFESSIONAL ENGINEER

Revisions

Rev.	Date	Description	Init.
1			

City of Harrisonburg
Engineering Division
409 S. Main St.
Harrisonburg, VA 22801

CITY OF HARRISONBURG VIRGINIA ESTABLISHED 1780

Public Safety Building Parking Lot

Cover Sheet

Engineer:	MRH	Scale:	NO SCALE
Drawn By:	MRH	Date:	January 2022
Checked By:	XXX	Tax Map No:	34-P-1

Sheet Number: 1 of 13

U:\Engineering Projects Comm Dev\Public Safety Building Parking\H-Dwgs\PS-Sheet Set\01 Title Notes.dwg Plotted: 2/28/2022 By: Matthew Huston

LEGEND

- MILL AND ASPHALT OVERLAY
- DEMO EXISTING ASPHALT PAVEMENT AND BASE
- DEMO EXISTING CONCRETE
- 4" CONCRETE SIDEWALK
- 7" CONCRETE SIDEWALK / CURB RAMP
- DETECTABLE WARNING
- NO. 21A STONE
- FULL DEPTH ASPHALT PAVEMENT
- LANDSCAPE AREA
- EXISTING BUILDING
- EXISTING ABOVEGROUND ELECTRICAL EQUIPMENT
- EXISTING UTILITY POLE WITH LUMINAIRE
- EXISTING LIGHT POLE
- MH — EXISTING SANITARY MANHOLE
- EXISTING ELECTRIC MANHOLE
- EXISTING STORM INLET
- D — EXISTING STORM MANHOLE
- C — COMMUNICATIONS JUNCTION BOX
- E — ELECTRIC JUNCTION BOX
- VIDEO DETECTION CAMERA
- RFID DETECTOR
- 6' x 20' VDZ — VIDEO DETECTION ZONE
- BOLLARD
- GATE MOTOR EQUIPMENT PAD
- EXISTING TREE

- SAW CUT
- PROPERTY BOUNDARY
- FLOODWAY
- 100-YEAR FLOODPLAIN
- EXISTING STORM PIPE
- EXISTING EDGE OF PAVEMENT
- EXISTING MAJOR / MINOR CONTOURS
- PAVEMENT MARKING
- FENCE
- CURB
- GUTTER
- UG-E — EXISTING UNDERGROUND ELECTRIC
- UG-E — NEW UNDERGROUND ELECTRIC
- UG-T — EXISTING UNDERGROUND COMMUNICATIONS
- UG-T — NEW UNDERGROUND COMMUNICATIONS
- OH-U — EXISTING OVERHEAD UTILITY
- OH-E — EXISTING OVERHEAD ELECTRIC
- GAS — GAS

- CONTROL POINT
- NEW SIGN
- EXISTING SIGN
- 1342.77 — FINISHED SPOT ELEVATION
- SURFACE RUNOFF FLOW DIRECTION

ABBREVIATIONS

ASPH	ASPHALT
C&G	CURB AND GUTTER
CGV	COLUMBIA GAS OF VIRIGINIA
COMCST	COMCAST
CONC	CONCRETE
DB	DEED BOOK
E	EAST, EASTING
EG	EXISTING GRADE
EL	ELEVATION
ELEC	ELECTRIC
ELEV	ELEVATION
ENT	ENTRANCE
EP	EDGE OF PAVEMENT
EX	EXISTING
FEMA	FEDERAL EMERGENCY MANAGEMENT AGENCY
FG	FINISHED GRADE
FIRM	FLOOD INSURANCE RATE MAP
FT	FOOT
HEC	HARRISONBURG ELECTRIC COMMISSION
INV	INVERT
LF	LINEAR FEET
MAX	MAXIMUM
MIN	MINIMUM
MK	MARKING
N	NORTH, NORTHING
NO	NUMBER
NTLS	NTELOS (NOW SHENTEL)
OC	ON CENTERS
OHE	OVERHEAD ELECTRIC
PG	PAGE
PROP	PROPOSED
PVMT	PAVEMENT
RET	RETAINING
S	SOUTH
SHEN	SHENTEL
SPEC	SPECIFICATION
ST	STREET
STD	STANDARD
SDWK	SIDEWALK
TRANS	TRANSITION
TY	TYPE
TYP	TYPICAL
VA	VIRGINIA
VDOT	VIRGINIA DEPARTMENT OF TRANSPORTATION
VRZN	VERIZON
W	WEST

COMMONWEALTH OF VIRGINIA
MATTHEW R. HUSTON
Lic. No. 037897
PROFESSIONAL ENGINEER

Revisions

Rev.	Date	Description	Init.
1			

City of Harrisonburg
Engineering Division
409 S. Main St.
Harrisonburg, VA 22801

CITY OF HARRISONBURG VIRGINIA ESTABLISHED 1780

Public Safety Building Parking Lot
Legend and Abbreviations

Engineer:	MRH	Scale:	NO SCALE
Drawn By:	MRH	Date:	January 2022
Checked By:	XXX	Tax Map No:	34-P-1

Sheet Number: 2 of 13

U:\Engineering Projects Comm Dev\Public Safety Building Parking\H-Dwgs\PS-Sheet Set\01 Title Notes.dwg Plotted: 2/28/2022 By: Matthew Huston

CITY GENERAL NOTES

1. Work in this project shall conform to the latest editions of the Virginia Department of Transportations (VDOT) Road and Bridge Specifications, the VDOT Road and Bridge Standards, the Virginia Erosion and Sediment Control Handbook, the Virginia Erosion and Sediment Control Regulations, the Virginia Stormwater Management Handbook, the Virginia Stormwater Management Regulations and the City of Harrisonburg Design and Construction Standards Manual. In the event of conflict between any of these standards, specifications, or plans, the most stringent shall govern. All utilities to be dedicated to the City of Harrisonburg Municipal Water and/or Sanitary Sewer System shall be constructed and tested to conform to Commonwealth of Virginia/State Board of Health Waterworks and/or Sewerage Regulations and the City of Harrisonburg Design and Construction Standards Manual.
2. Erosion and Sediment control measures shall be maintained continuously relocated when and as necessary and shall be checked after every rainfall. Seeded areas shall be checked regularly and shall be watered, fertilized, reseeded, and mulched as necessary to obtain a dense stand of grass.
3. All drain inlets shall be protected from siltation. Ineffective protection devices shall be immediately replaced and the inlet cleaned. Flushing is not an acceptable method of cleaning.
4. When the crushed stone construction entrance has been covered with soil or has been pushed into the soil by construction traffic, it shall be replaced with a depth of stone equal to that of original application.
5. The location of existing utilities as shown is approximate only. The contractor is responsible for locating all public or private utilities that lie in or adjacent to the construction site. The contractor shall be responsible for repairing, at his expense, all existing utilities damaged during construction. Forty–eight (48) hours prior to any excavation call Miss Utility 1 (800) 552–7001.
6. All underground facilities located within the City's rights–of–way shall be installed prior to the placement of any part of the pavement structure.
7. Installation of concrete storm pipe shall comply with VDOT Standard Drawing PB–1.
8. All materials used for fill or back–fill shall be free of wood, roots, rocks, boulders, or any other non–compactable soil type material. Unsatisfactory materials also include man–made fills and refuse debris derived from any source.
9. Satisfactory material for use as fill for public streets include material classified in ASTM D–2487 as GW, GP, GM, GC, SW, SP, SM, SC, ML, and CL groups. The moisture content shall be controlled within plus or minus 2 percentage points of optimum to facilitate compaction. Generally, unsatisfactory materials include materials classified in ASTM D–2487 as PT, CH, MH, OL, OH, and any soil too wet to facilitate compaction. CH and MH soils may be used subject to approval of the City Engineer. Soils shall have a minimum dry density of 92lb/cubic foot per ASTM D–698 and shall have a plasticity index less than 12.
10. Compaction of fill material under building slabs shall be based upon recommendations of soils engineer after completion of standard Proctor test and shall meet bearing requirements of architect for buildings. The contractor shall be responsible for testing.
11. Materials used to construct embankments for any purpose, back–fill around drainage structures or in utility trenches or any other depression requiring fill or back–fill shall be compacted to 95% of maximum density as determined by the standard Proctor test as set out in ASTM standard D–698. The contractor shall, prior to any operations involving filling or backfilling, submit the result of the Proctor test to the city's on–site inspector together with a certification that the soil tested in representative of the materials to be used on the project. Tests shall be conducted by a certified materials testing laboratory and the certifications made by a licensed professional engineer representing the laboratory.
12. Certifications for materials including, but not limited to stone, concrete, pipes, precast units, handrails, stabilization mats, traffic signal items, must be provided to the city's on–site inspector and approved by the inspector prior to installation. See inspector for Materials Certification Checklist.
13. Embankment fill and trench back–fill shall be placed in lifts at a maximum uncompacted depth of 8–inches and 6–inches, respectively. Density tests shall be conducted at the following minimum frequencies:
    a. Embankment for roads, streets, dams, etc.: One test per lift per 10,000 square feet of lift.
    b. Back–fill around structures and in trenches: One test per lift per 500 lineal feet of trench.
14. Compaction tests for street pavement structure shall be made in cut and fill areas at the following minimum frequencies:
    a. Sub–Grade: One test per lane per 500 lineal feet.
    b. Stone Base: One test per lane per 6" compacted lift per 500 lineal feet.
    c. Hot Asphaltic Concrete: One test per lane per lift per 500 lineal feet.
15. All excavations, including trenches, shall be kept dry to protect their integrity.
16. Test results shall be submitted to the City Engineer. Failure to conduct density tests and submit test results shall be cause for non–acceptance of the facility. Tests shall be conducted at the sole cost of the developer or his agent.
17. Combination under–drains type CD–1 shall be installed at the lower end of the cut sections. Under–drains type CD–2 shall be installed at the low point of all vertical curves.
18. Standard UD–1 and UD–3 under–drains shall be installed where indicated on plans on further where determined necessary in the field by the City Inspectors.
19. City Inspectors have full authority to reject fill or backfill materials, require undercutting or sub grade stabilization, require provisions for sub drainage, or require other measures which affect the integrity of road and utility construction. Failure to comply with Inspectors' directives shall be cause for non–acceptance of the facility.
20. Traffic control on public streets shall be in conformance with the Manual of Uniform Traffic Control Devices and as further directed by City Inspectors. City Inspectors must be notified 24–hours in advance of any planned work or activity in city right–of–way that requires flagging, lane closure or street closure. All signage and other control devices shall be in place before such activities can commence.
21. Any discrepancies found between the drawings and specifications and site conditions or any inconsistencies or ambiguities in drawings or specifications shall be immediately reported to the engineer, in writing, who shall promptly address such inconsistencies or ambiguities. Work done by the contractor after his discovery of such discrepancies, inconsistencies or ambiguities shall be done at the contractor's risk.
22. A preconstruction conference shall be held prior to the start of construction. The contractor shall arrange the meeting with the City Engineer. At this time, the contractor shall provide a schedule and traffic control plan for work within the city right–of–way.
23. Install City standard street centerline monuments where required for new streets.
24. If Traffic Signal plans have been revised or changed since approval, the developer must provide to the Director of Public Works as–built drawings reflecting changes. Provision of as–built drawings is a condition of bond release.

EROSION & SEDIMENT CONTROL NOTES

1. Unless otherwise indicated, all vegetative and structural erosion and sediment control practices shall be constructed and maintained according to the minimum standards and specifications of the Virginia Erosion and Sediment Control Handbook (VESCH) and Virginia Erosion and Sediment Control regulations.

2. Sediment basins and traps, perimeter dikes, sediment barriers and any other measures intended to trap sediment shall be constructed as a first step in any land disturbing activity and shall be made functional before upslope land disturbances take place.

3. A copy of the approved erosion and sediment control plan shall be maintained on the site at all times.

4. The contractor is responsible for the installation of any additional erosion control measures necessary to prevent erosion and sedimentation as determined by the plan approving authority.

5. All disturbed areas are to drain to approved sediment control measures at all times during land disturbing activities and during site development until final stabilization is achieved.

6. During dewatering operations, water shall be pumped into an approved filtering device.

7. The contractor shall inspect all erosion control measures periodically and within 24 hours after each runoff producing rainfall event. Any necessary repairs or cleanup to maintain the effectiveness of the erosion control devices shall be made immediately.

8. Permanent or temporary soil stabilization shall be applied to denuded areas within seven (7) days after final grade is reached on any portion of the site. temporary soil stabilization shall be applied within seven (7) days to denuded areas that may not be at final grade but will remain dormant (undisturbed for longer than 30 days). Permanent stabilization shall be applied to areas that are to be left dormant for more than one year.

9. A permanent vegetative cover shall be established on denuded areas not otherwise permanently stabilized. permanent vegetation shall not be considered established until a ground cover is achieved that is uniform, mature enough to survive, and will inhibit erosion.

10. During construction of the project, soil stock piles shall be stabilized or protected with sediment trapping measures.

11. Cut and fill slopes shall be constructed in a manner that will minimize erosion. slopes that are found to be eroding excessively within one year of permanent stabilization shall be provided with additional slope stabilizing measures until the problem is corrected.

12. All storm sewer inlets that are made operable during construction shall be protected so that sediment–laden water cannot enter the conveyance system without first being filtered or otherwise treated to remove sediment.

13. Underground utility lines shall be installed in accordance with the following standards in addition to other applicable criteria:

a) No more than 500 linear feet of trench may be open at any given time.
b) Excavated materials shall be placed on the uphill side of trenches.
c) The effluent from dewatering operations shall be filtered or passed through an approved sediment trapping device or both. The effluent shall be discharged in a manner that does not adversely affect flowing streams or offsite property.
d) Material used for backfilling trenches shall be properly compacted in order to minimize erosion and promote stabilization.
e) Restabilization shall be accomplished in accordance with these notes and applicable regulations.
f) Applicable safety regulations shall be complied with.

14. Where construction vehicle access routes intersect paved road or public roads, provisions shall be made to minimize the transport of sediment by vehicular tracking onto the paved surface. Where sediment is transported onto a paved or public road surface, the road shall be cleaned thoroughly at the end of each day. Sediment shall be removed from the road by shoveling or sweeping and transported to a sediment control disposal area. Street washing shall be allowed only after sediment is removed in this manner.

15. All temporary erosion and sediment control measures shall be removed within thirty (30) days after final site stabilization or after the temporary measures are no longer needed, unless otherwise authorized by the local program administrator. Trapped sediment and the disturbed soil areas resulting from the disposition of temporary measures shall be permanently stabilized to prevent further erosion and sedimentation.

UTILITY NOTE

COLUMBIA GAS HAS A CRITICAL FACILITY ON THIS SITE. CONTRACTOR SHALL COORDINATE WITH COLUMBIA GAS. UTILITY OPERATOR MUST BE PRESENT ON SITE DURING EXCAVATION IN THE VICINITY OF THIS UTILITY.

COMMONWEALTH OF VIRGINIA
MATTHEW R. HUSTON
Lic. No. 037897
PROFESSIONAL ENGINEER

Revisions			
Rev.	Date	Description	Init.
1			

City of Harrisonburg
Engineering Division
409 S. Main St.
Harrisonburg, VA 22801

CITY OF HARRISONBURG ESTABLISHED 1780 VIRGINIA

Public Safety Building Parking Lot
General Notes

Engineer:	MRH	Scale:	NO SCALE
Drawn By:	MRH	Date:	January 2022
Checked By:	XXX	Tax Map No:	34–P–1

Sheet Number: 3 of 13

U:\Engineering Projects Comm Dev\Public Safety Building Parking\H-Dwgs\PS-Sheet Set\01 Title Notes.dwg Plotted: 2/28/2022 By: Matthew Huston

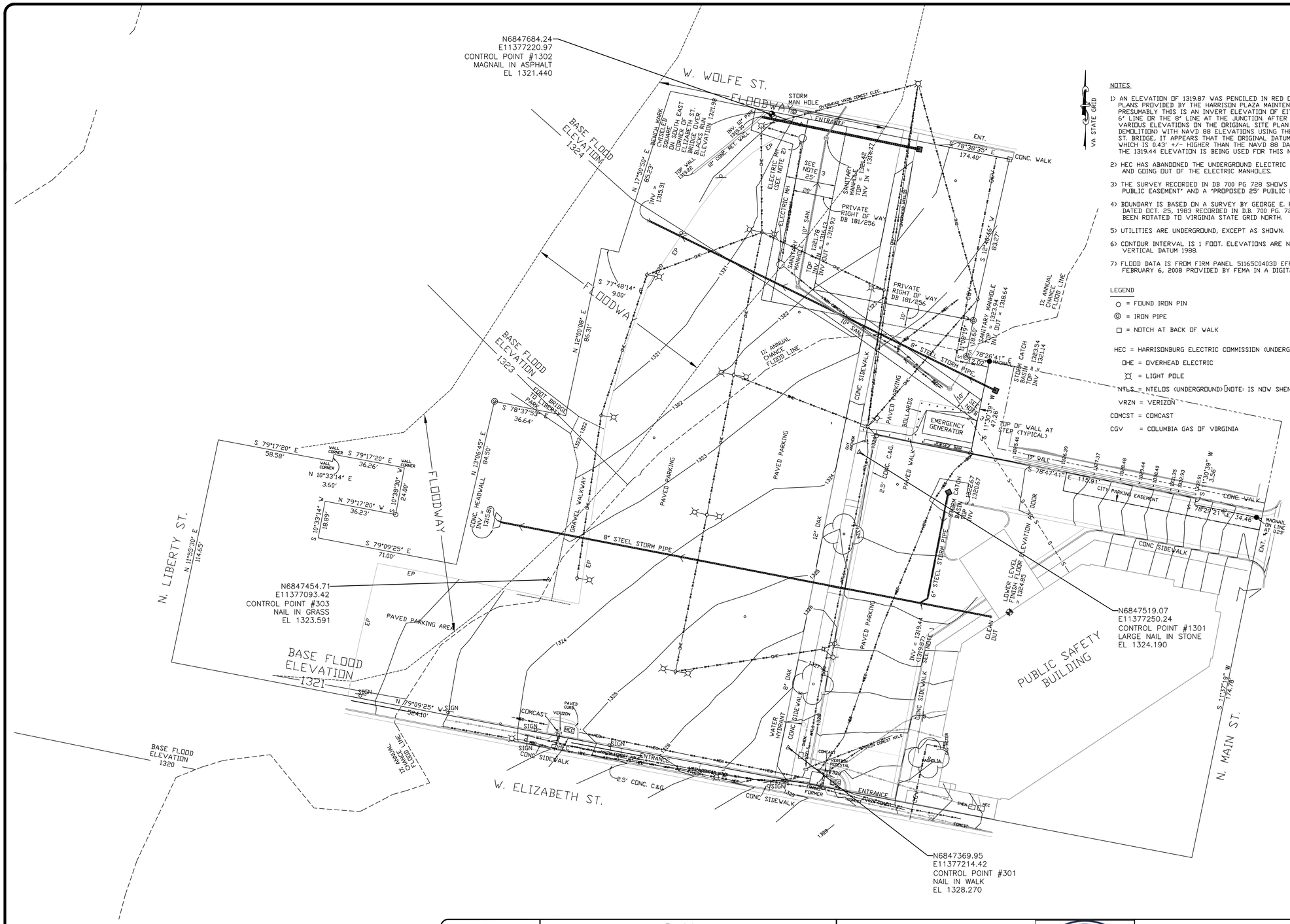

NOTES

1) AN ELEVATION OF 1319.87 WAS PENCILED IN RED ON A SET OF PLANS PROVIDED BY THE HARRISON PLAZA MAINTENANCE STAFF. PRESUMABLY THIS IS AN INVERT ELEVATION OF EITHER THE 6' LINE OR THE 8' LINE AT THE JUNCTION. AFTER COMPARING VARIOUS ELEVATIONS ON THE ORIGINAL SITE PLAN (UTILITY AND DEMOLITION) WITH NAVD 88 ELEVATIONS USING THE B.M. ON THE W. WOLFE ST. BRIDGE, IT APPEARS THAT THE ORIGINAL DATUM WAS ON NGVD 29, WHICH IS 0.43' +/- HIGHER THAN THE NAVD 88 DATUM. THEREFORE THE 1319.44 ELEVATION IS BEING USED FOR THIS NOTATION.

2) HEC HAS ABANDONED THE UNDERGROUND ELECTRIC COMING INTO AND GOING OUT OF THE ELECTRIC MANHOLES.

3) THE SURVEY RECORDED IN DB 700 PG 728 SHOWS A 'PROPOSED 10' PUBLIC EASEMENT' AND A 'PROPOSED 25' PUBLIC EASEMENT'.

4) BOUNDARY IS BASED ON A SURVEY BY GEORGE E. FOARD DATED OCT. 25, 1983 RECORDED IN D.B. 700 PG. 728. BEARINGS HAVE BEEN ROTATED TO VIRGINIA STATE GRID NORTH.

5) UTILITIES ARE UNDERGROUND, EXCEPT AS SHOWN.

6) CONTOUR INTERVAL IS 1 FOOT. ELEVATIONS ARE NORTH AMERICAN VERTICAL DATUM 1988.

7) FLOOD DATA IS FROM FIRM PANEL 51165C0403D EFFECTIVE DATE FEBRUARY 6, 2008 PROVIDED BY FEMA IN A DIGITAL FORMAT.

LEGEND

○ = FOUND IRON PIN

◎ = IRON PIPE

□ = NOTCH AT BACK OF WALK

HEC = HARRISONBURG ELECTRIC COMMISSION (UNDERGROUND)

OHE = OVERHEAD ELECTRIC

= LIGHT POLE

NTLS = NTELDS (UNDERGROUND)[NOTE: IS NOW SHENTEL (SHEN)]

VRZN = VERIZON

COMCST = COMCAST

CGV = COLUMBIA GAS OF VIRGINIA

0 25 50 Feet

COMMONWEALTH OF VIRGINIA
MATTHEW R. HUSTON
Lic. No. 037897
PROFESSIONAL ENGINEER

Revisions			
Rev.	Date	Description	Init.
1			

City of Harrisonburg
Engineering Division
409 S. Main St.
Harrisonburg, VA 22801

Public Safety Building Parking Lot

Existing Conditions Plan

Engineer:	MRH	Scale:	1" = 25'
Drawn By:	MRH	Date:	January 2022
Checked By:	DJR	Tax Map No:	34-P-1

Sheet Number: 4 of 13

U:\Engineering Projects Comm Dev\Public Safety Building Parking\H-Dwgs\PS-Sheet Set\02 Geometric Plans.dwg Plotted: 2/28/2022 By: Matthew Huston

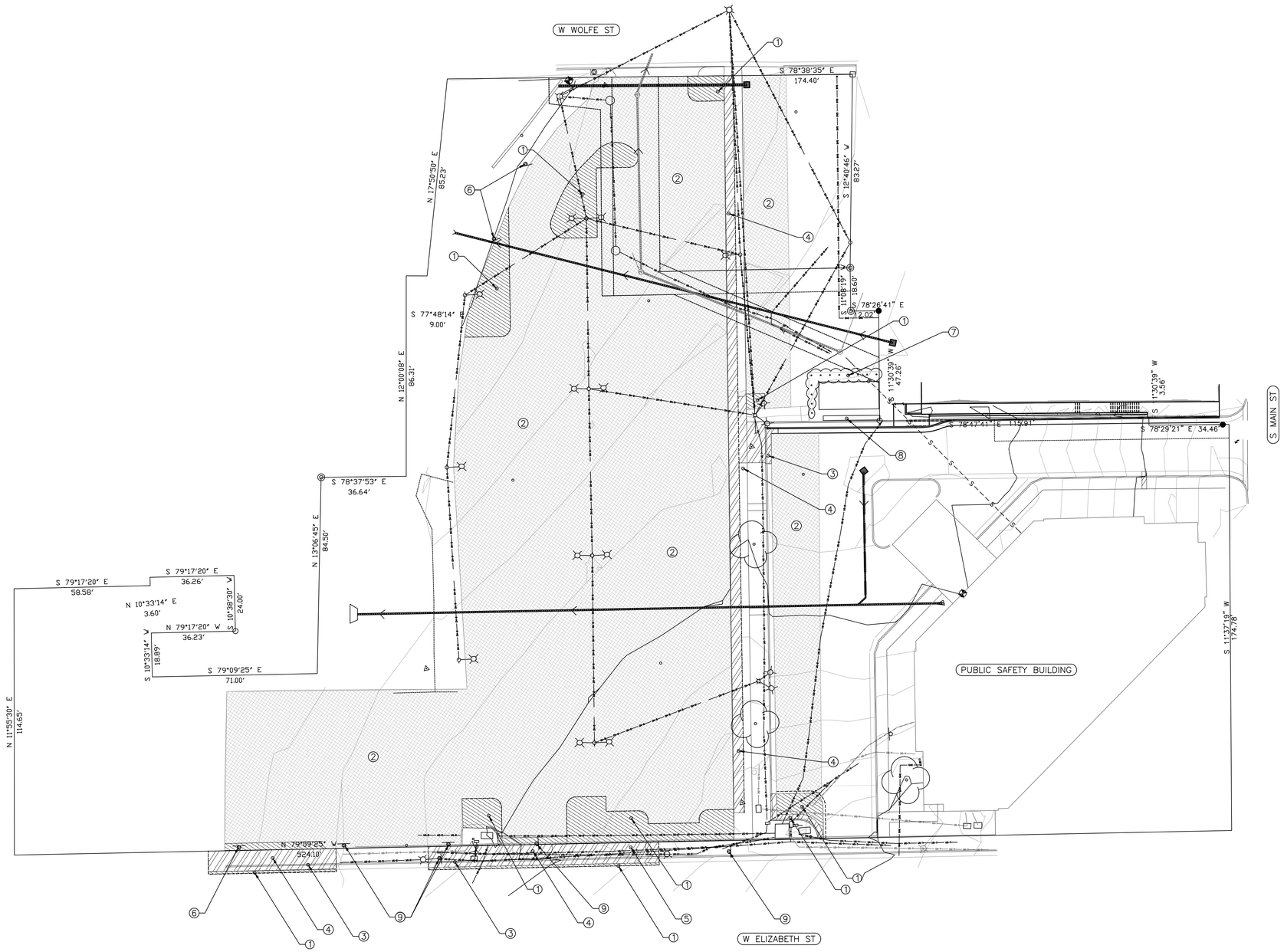

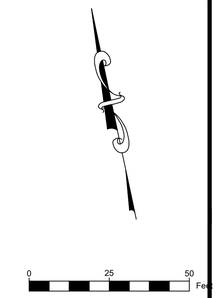

KEYED NOTES:

1. DEMO EX ASPH PAVEMENT AND BASE
2. MILL 2"OF EX ASPHALT PAVEMENT TO REMOVE PAVEMENT MARKINGS
3. DEMO EX CONC CURB OR CURB & GUTTER
4. DEMO EX CONC SIDEWALK WITHIN LIMITS SHOWN
5. DEMO EX ENTRANCE
6. REMOVE EX SIGN
7. REMOVE BOLLARDS
8. REMOVE CONCRETE BARRIER
9. SIGN TO BE RELOCATED. SEE SHEET 8.

SHEET NOTES:

1. ALL EXISTING LIGHT POLES, UTILITY POLES, ELECTRICAL EQUIPMENT, TREES, AND DRAINAGE ELEMENTS SHALL REMAIN.
2. REMOVE EXISTING PARKING ALLOCATION SIGNS WITHIN PARKING LOT AND SALVAGE TO DEPARTMENT OF PUBLIC WORKS. REINSTALL AT CONCLUSION OF THE PROJECT AS DIRECTED BY THE PROJECT MANAGER.
3. REMOVE ALL EXISTING FLEXIBLE POST OBJECT MARKERS WITHIN THE LIMITS OF WORK.
4. REMOVE ALL EXISTING WHEELSTOPS WITHIN THE LIMITS OF WORK.

LEGEMD

SAW CUT

MILL HATCH

OTHER DEMO HATCH

COMMONWEALTH OF VIRGINIA
MATTHEW R. HUSTON
Lic. No. 037897
PROFESSIONAL ENGINEER

Revisions			
Rev.	Date	Description	Init.
1			

City of Harrisonburg
Engineering Division
409 S. Main St.
Harrisonburg, VA 22801

CITY OF HARRISONBURG VIRGINIA ESTABLISHED 1780

Public Safety Building Parking Lot

Demolition Plan

Engineer:	MRH	Scale:	1" = 25'
Drawn By:	MRH	Date:	January 2022
Checked By:	DJR	Tax Map No:	34-P-1

Sheet Number: 5 of 13

U:\Engineering Projects Comm Dev\Public Safety Building Parking\H-Dwgs\PS-Sheet Set\02 Geometric Plans.dwg Plotted: 2/28/2022 By: Matthew Huston

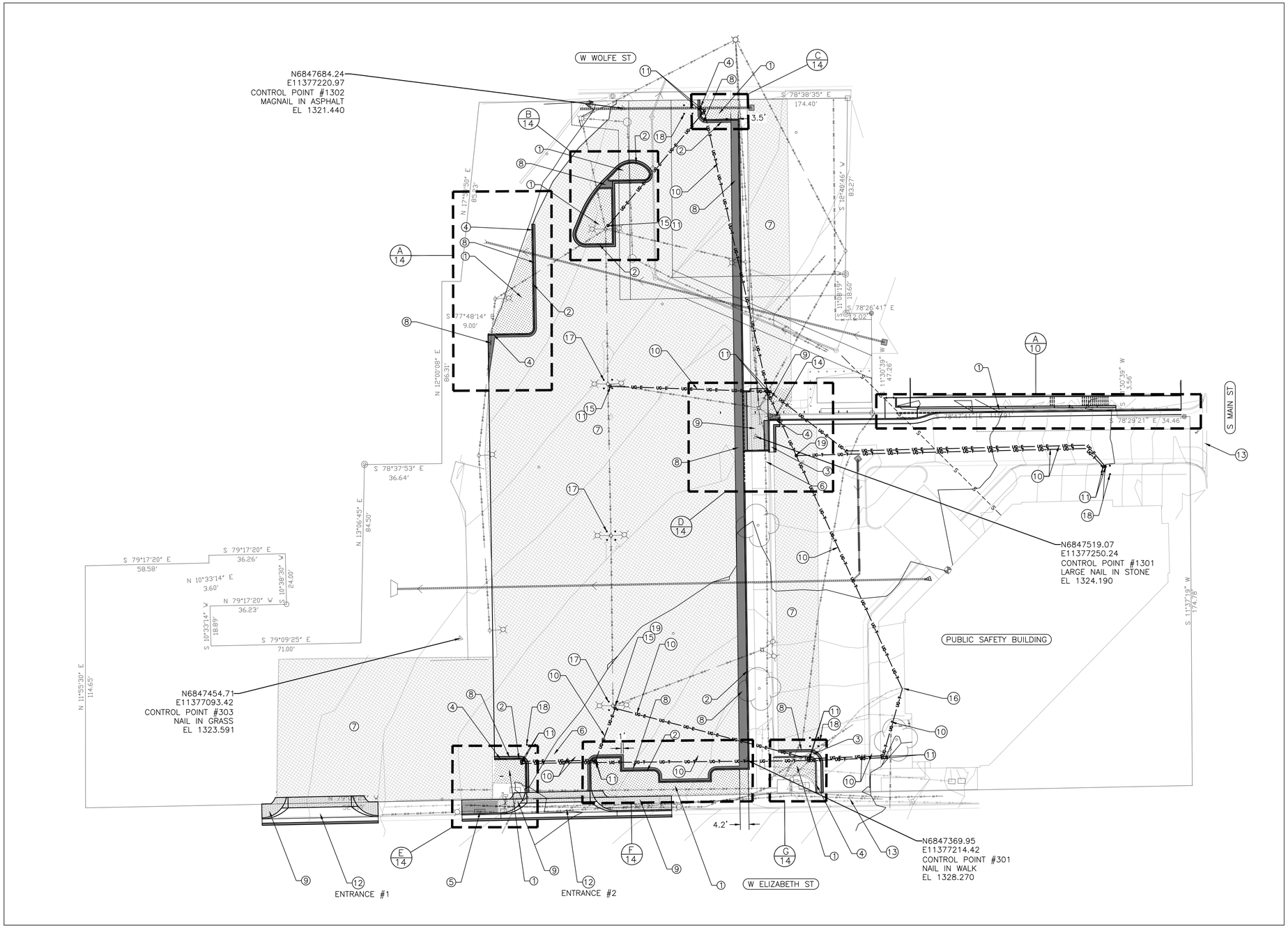

0 25 50 Feet

KEYED NOTES:

1. LANDSCAPE AREA
2. VDOT STD CG-2 CURB
3. VDOT STD CG-6 CURB & GUTTER
4. TRANSITION CURB FROM 6" HIGH TO 0" HIGH
5. TYPE B CURB RAMP, VDOT STD CG-12
6. DETECTABLE WARNING, VDOT STD CG-12
7. 2" ASPHALT OVERLAY, RETURN TO EX GRADE
8. FULL DEPTH ASPHALT PAVEMENT
9. CONCRETE SIDEWALK
10. 2" PVC CONDUIT, SEE VDOT STDS ECI-1, ECI-2
11. JUNCTION BOX, VDOT STD JB-S1
12. ENTRANCE, VDOT STD CG-9D
13. EXISTING ENTRANCE TO REMAIN
14. REINSTALL NO. 21A STONE BEHIND CURB
15. POWER DROP LOCATION
16. APPROX LOCATION TO CONNECT TO COMMS ROOM
17. FOUR BOLLARDS AROUND EX UTILITY POLE, 4' ON CENTERS
18. FOUR BOLLARDS AROUND GATE MOTOR ASS'Y TO BE INSTALLED BY FENCE CONTRACTOR
19. JUNCTION BOX, VDOT STD JB-R1

SHEET NOTES

1. SEE DETAILS ON SHEETS 10, 11, 12, AND 13.
2. VDOT ROAD AND BRIDGE STANDARD DRAWINGS, LATEST EDITION, ARE HEREBY INCORPORATED BY REFERENCE.

COMMONWEALTH OF VIRGINIA
MATTHEW R. HUSTON
Lic. No. 037897
PROFESSIONAL ENGINEER

Revisions

Rev.	Date	Description	Init.
1			

City of Harrisonburg
Engineering Division
409 S. Main St.
Harrisonburg, VA 22801

CITY OF HARRISONBURG VIRGINIA ESTABLISHED 1780

Public Safety Building Parking Lot

Paving and Utility Plan

Engineer:	MRH	Scale:	1" = 25'	Sheet Number: 6
Drawn By:	MRH	Date:	January 2022	of 13
Checked By:	DJR	Tax Map No:	34-P-1	

U:\Engineering Projects Comm Dev\Public Safety Building Parking\H-Dwgs\PS-Sheet Set\02 Geometric Plans.dwg Plotted: 2/28/2022 By: Matthew Huston

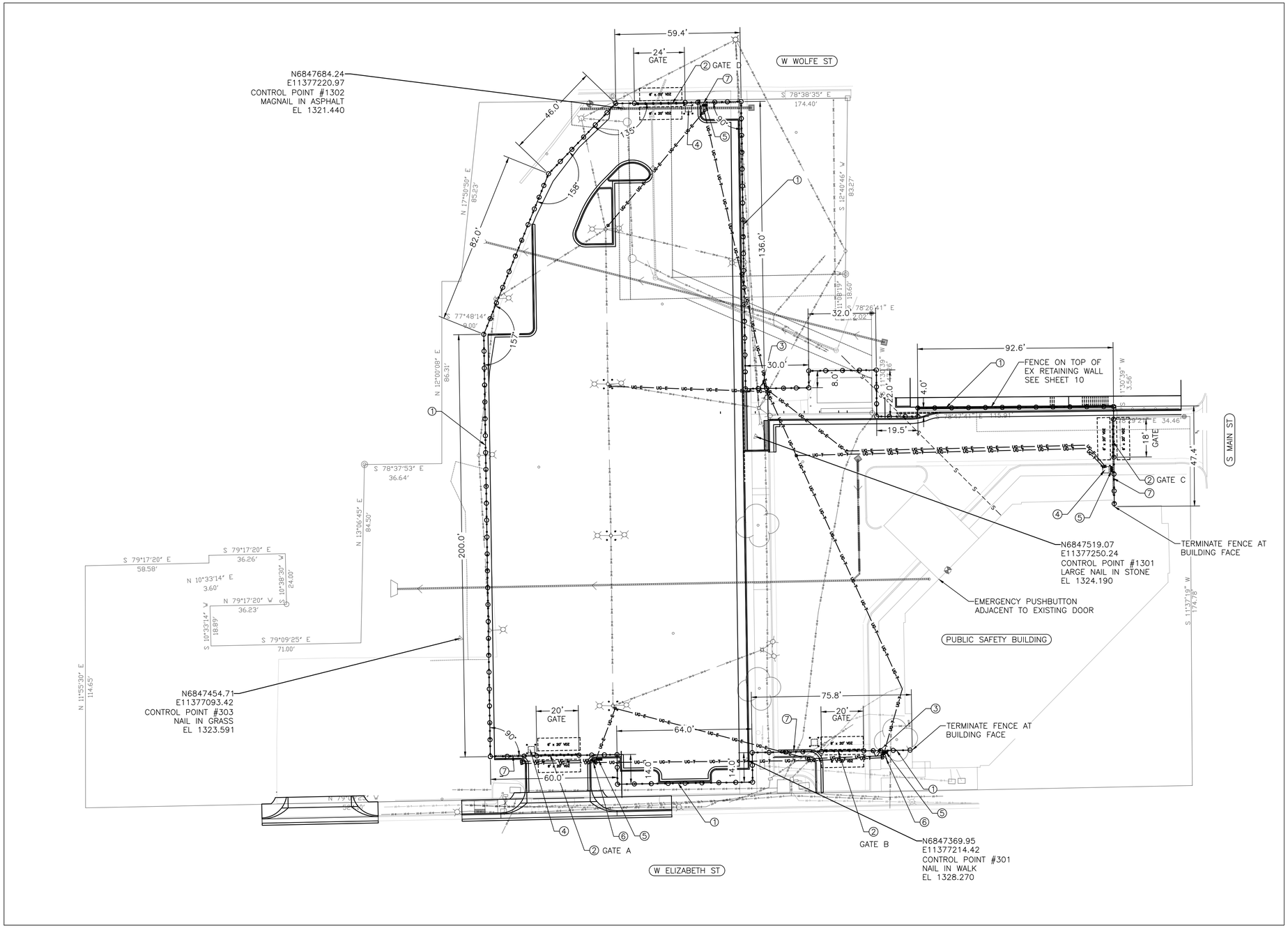

KEYED NOTES:

1. 8' HIGH SECURITY FENCE
2. MOTORIZED VEHICLE GATE
3. PEDESTRIAN GATE
4. GATE DRIVE MOTOR PAD WITH BOLLARDS AT CORNERS
5. VIDEO DETECTION CAMERA
6. RFID READER ASSEMBLY
7. GATE TRACK

SHEET NOTES:

1. FENCE CONTRACTOR SHALL FURNISH AND INSTALL SECURITY FENCE AND GATE SYSTEM AS A 'TURNKEY' PROJECT. SYSTEM SHALL INCLUDE, BUT MAY NOT BE LIMITED TO, POSTS, FOOTINGS AND FOUNDATIONS, PICKETS, RAILS, FITTINGS, HINGES, ATTACHMENT HARDWARE, VEHICULAR AND PEDESTRIAN GATES, GATE TRACKS, GATE MOTORS, ELECTRICAL AND COMMUNICATIONS CABLES, TRANSFORMERS, COMMUNICATIONS EQUIPMENT AND SUPPORTS, CAMERAS, DETECTORS, AND CARD READERS.
2. FENCE CONTRACTOR SHALL CONTACT VA811 (FORMERLY MISS UTILITY) AT 800-552-7001 AT LEAST 72 HOURS PRIOR TO EXCAVATION.
3. CRITICAL COLUMBIA GAS FACILITIES ARE LOCATED ON SITE. COLUMBIA GAS PERSONNEL MUST BE PRESENT ON SITE DURING EXCAVATION AROUND THEIR UTILITIES.
4. FENCE DIMENSIONS SHOWN ARE APPROXIMATE. FENCE CONTRACTOR SHALL PROPOSE EXACT DIMENSIONS AS REQUIRED.
5. FENCE SHALL BE SIMILAR TO AMERISTAR ECHELON II, CLASSIC STYLE, TO BE APPROVED BY CITY PROJECT MANAGER.
6. VEHICULAR GATES SHALL BE SIMILAR TO AMERISTAR PASSPORT II INDUSTRIAL ORNAMENTAL ROLL GATE, TO BE APPROVED BY CITY PROJECT MANAGER.
7. PEDESTRIAN GATES SHALL BE SIMILAR TO AMERISTAR ECHELON II, TO BE APPROVED BY CITY PROJECT MANAGER.
8. RFID READER SHALL BE TRANSCORE SMARTPASS 4 AND FULLY COMPATIBLE WITH CITY'S EXISTING RFID SYSTEM.
9. GRIDSMART GS2 PROCESSOR VIDEO DETECTION SYSTEM USING BELL CAMERAS SHALL BE USED FOR VEHICLE DETECTION.

COMMONWEALTH OF VIRGINIA
MATTHEW R. HUSTON
Lic. No. 037897
PROFESSIONAL ENGINEER

Revisions

Rev.	Date	Description	Init.
1			

City of Harrisonburg
Engineering Division
409 S. Main St.
Harrisonburg, VA 22801

Public Safety Building Parking Lot

Fence Plan

Engineer:	MRH	Scale:	1" = 25'
Drawn By:	MRH	Date:	January 2022
Checked By:	DJR	Tax Map No:	34-P-1

Sheet Number: 7 of 13

U:\Engineering Projects Comm Dev\Public Safety Building Parking\H-Dwgs\PS-Sheet Set\02 Geometric Plans.dwg Plotted: 2/28/2022 By: Matthew Huston

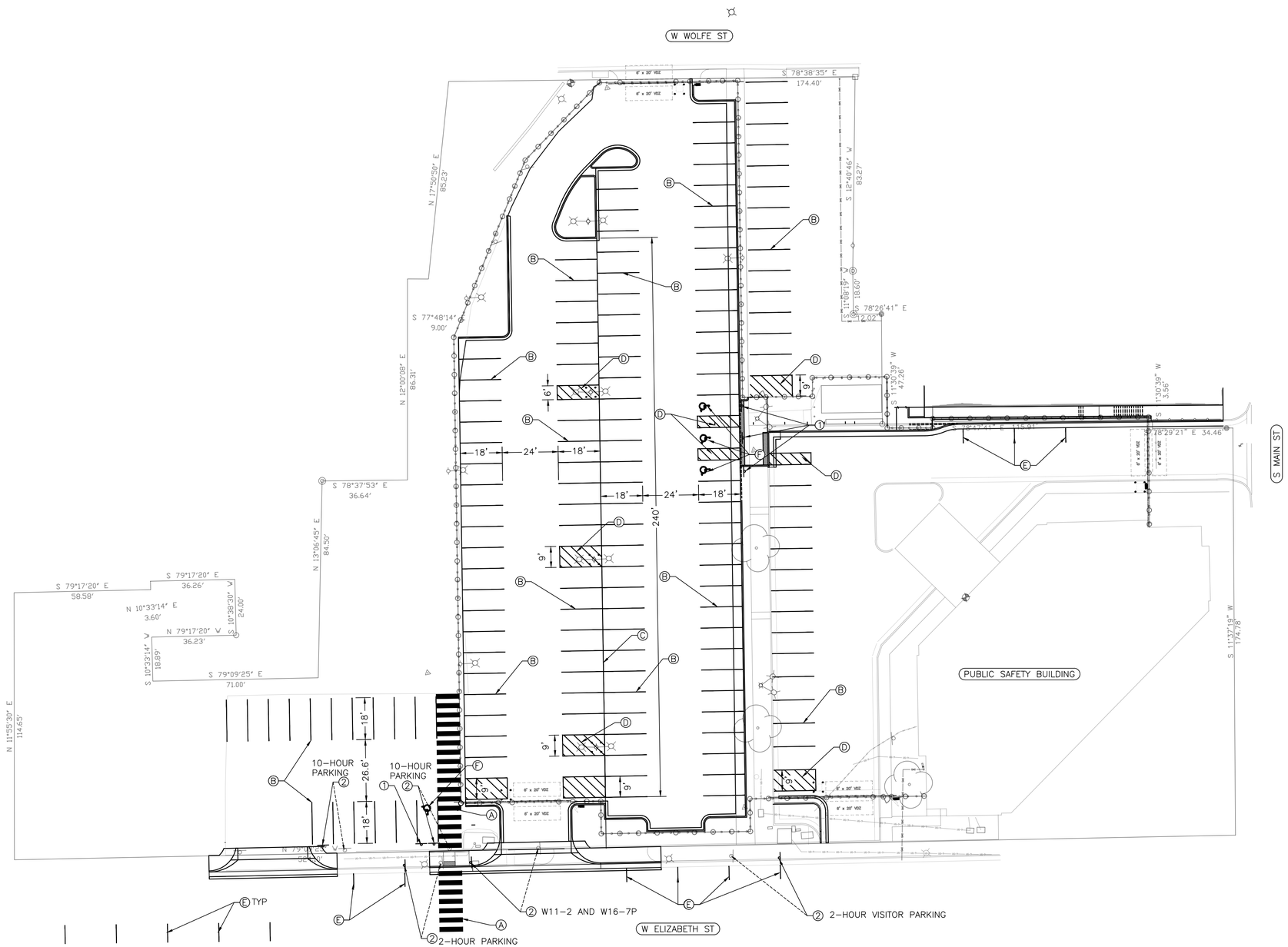

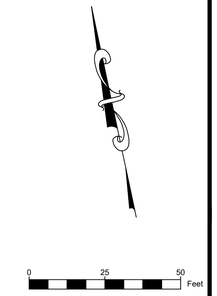

KEYED NOTES – MARKING:

- (A) 24" WHITE PAV MK, 10' LONG, 4' ON CENTERS
- (B) 4" WHITE PAV MK, 18' LONG, 9' ON CENTERS
- (C) 4' WHITE PAV MK, LENGTH AS SHOWN
- (D) 4" WHITE PAV MK HATCH, SEE DETAILS ON SHEET 12
- (E) 4" WHITE PAV MK, 6' LONG, 22' ON CENTERS
- (F) WHEELCHAIR SYMBOL PAV MK

KEYED NOTES – SIGNING:

- (1) ADA PARKING SIGN, SEE DETAIL ON SHEET 12
- (2) REMOVE AND RESET EXISTING SIGN

COMMONWEALTH OF VIRGINIA
MATTHEW R. HUSTON
Lic. No. 037897
PROFESSIONAL ENGINEER

Revisions			
Rev.	Date	Description	Init.
1			

City of Harrisonburg
Engineering Division
409 S. Main St.
Harrisonburg, VA 22801

CITY OF HARRISONBURG VIRGINIA ESTABLISHED 1780

Public Safety Building Parking Lot

Pavement Marking Plan

Engineer:	MRH	Scale:	1" = 25'
Drawn By:	MRH	Date:	January 2022
Checked By:	DJR	Tax Map No:	34-P-1

Sheet Number: 8 of 13

U:\Engineering Projects Comm Dev\Public Safety Building Parking\H-Dwgs\PS-Sheet Set\02 Geometric Plans.dwg Plotted: 2/28/2022 By: Matthew Huston

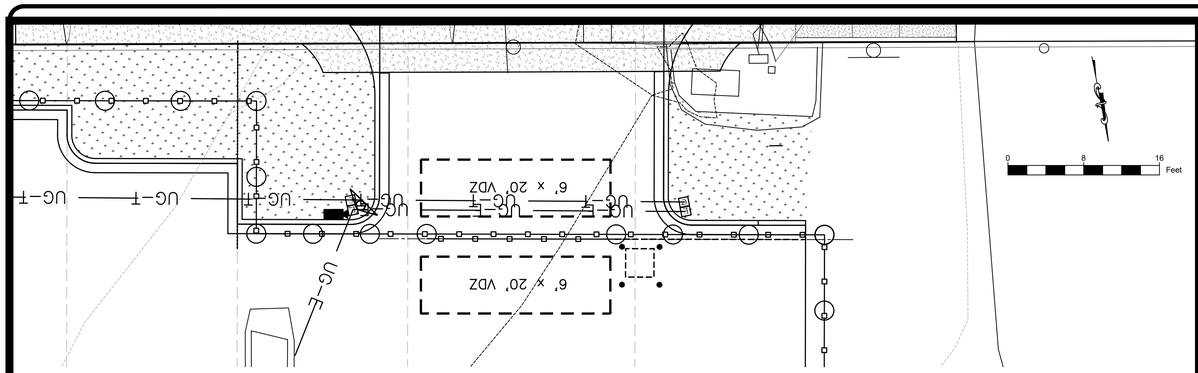

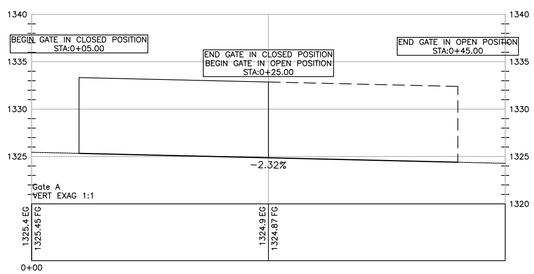

PLAN AND PROFILE
GATE A
SCALE: 1" = 8'

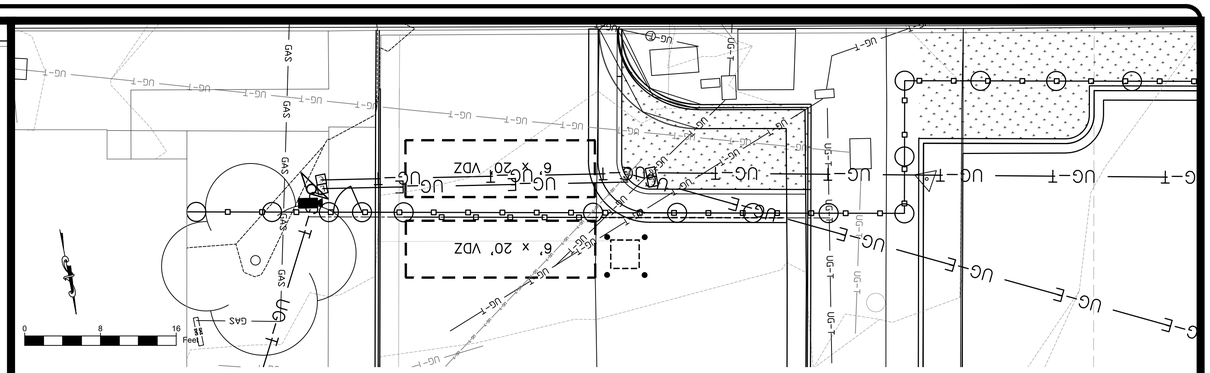

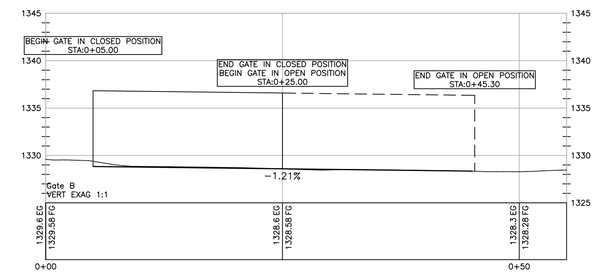

PLAN AND PROFILE
GATE B
SCALE: 1" = 8'

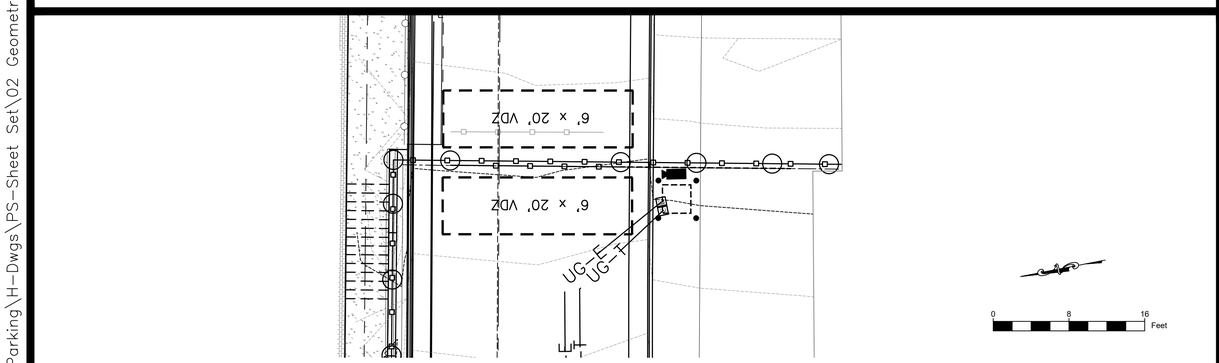

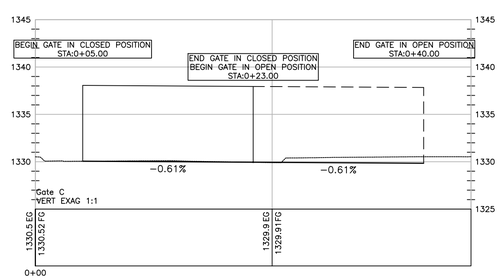

PLAN AND PROFILE
GATE C
SCALE: 1" = 8'

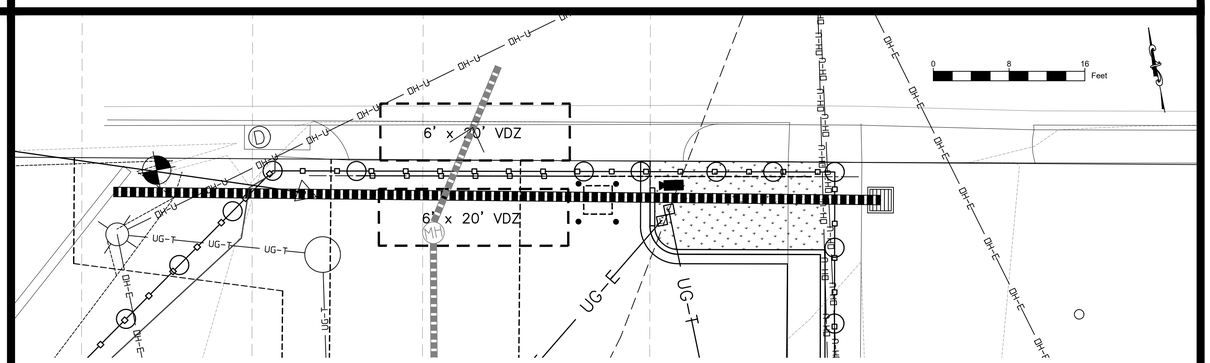

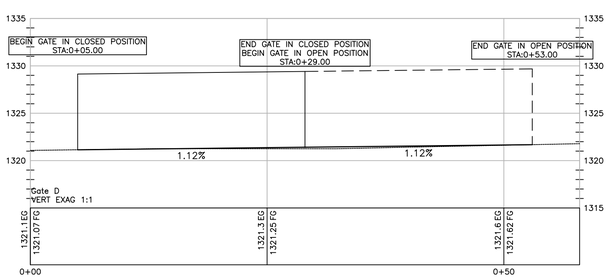

PLAN AND PROFILE
GATE D
SCALE: 1" = 8'

U:\Engineering Projects Comm Dev\Public Safety Building Parking\H-Dwgs\PS-Sheet Set\02 Geometric Plans.dwg Plotted: 2/28/2022 By: Matthew Huston

COMMONWEALTH OF VIRGINIA
MATTHEW R. HUSTON
Lic. No. 037897
PROFESSIONAL ENGINEER

Revisions

Rev.	Date	Description	Init.
1			

City of Harrisonburg
Engineering Division
409 S. Main St.
Harrisonburg, VA 22801

CITY OF HARRISONBURG VIRGINIA ESTABLISHED 1780

Public Safety Building Parking Lot

Gate Profiles

Engineer:	MRH	Scale:	1" = 8'
Drawn By:	MRH	Date:	January 2022
Checked By:	DJR	Tax Map No:	34-P-1

Sheet Number: 9 of 13

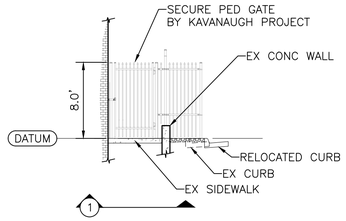

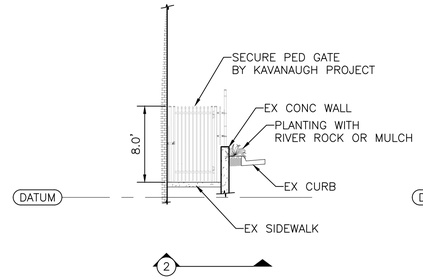

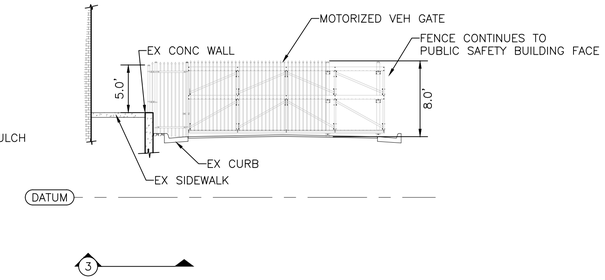

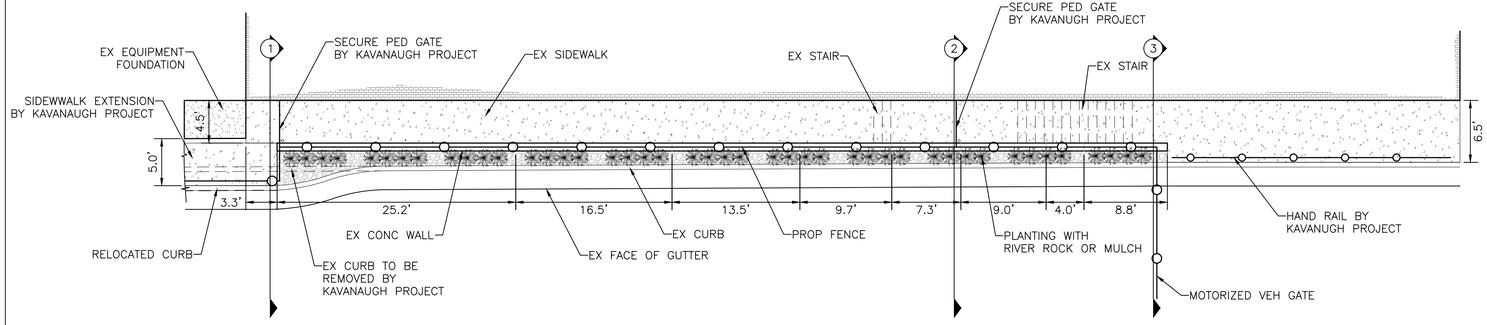

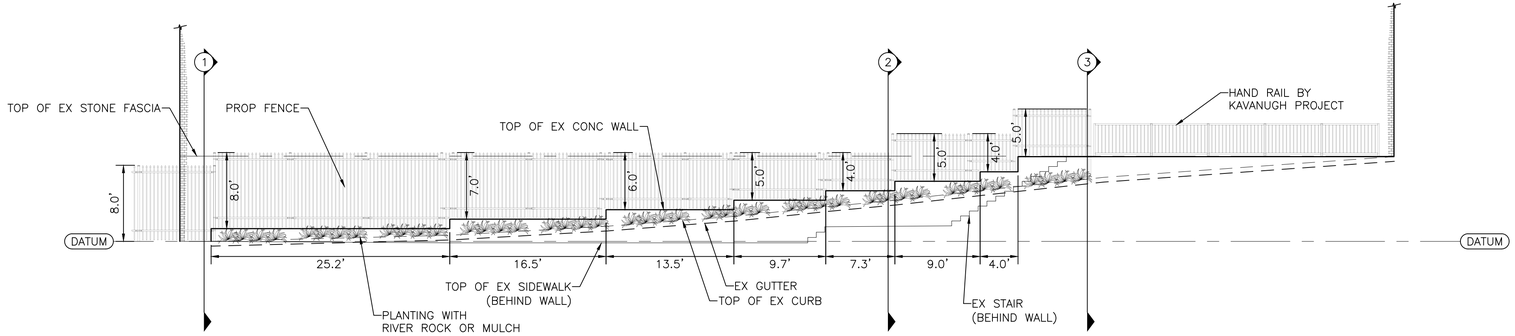

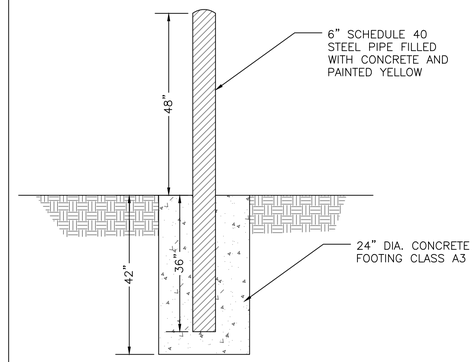

BOLLARD DETAIL
N.T.S.

A
10

U:\Engineering Projects Comm Dev\Public Safety Building Parking\H-Dwgs\PS-Sheet Set\03 Details.dwg Plotted: 2/28/2022 By: Matthew Huston

COMMONWEALTH OF VIRGINIA
MATTHEW R. HUSTON
Lic. No. 037897
PROFESSIONAL ENGINEER

Revisions			
Rev.	Date	Description	Init.
1			

City of Harrisonburg
Engineering Division
409 S. Main St.
Harrisonburg, VA 22801

CITY OF HARRISONBURG
ESTABLISHED 1780
VIRGINIA

Public Safety Building Parking Lot
Details 1

Engineer:	MRH	Scale:	AS SHOWN
Drawn By:	MRH	Date:	January 2022
Checked By:	XXX	Tax Map No:	34-P-1

Sheet Number: 10
of 13

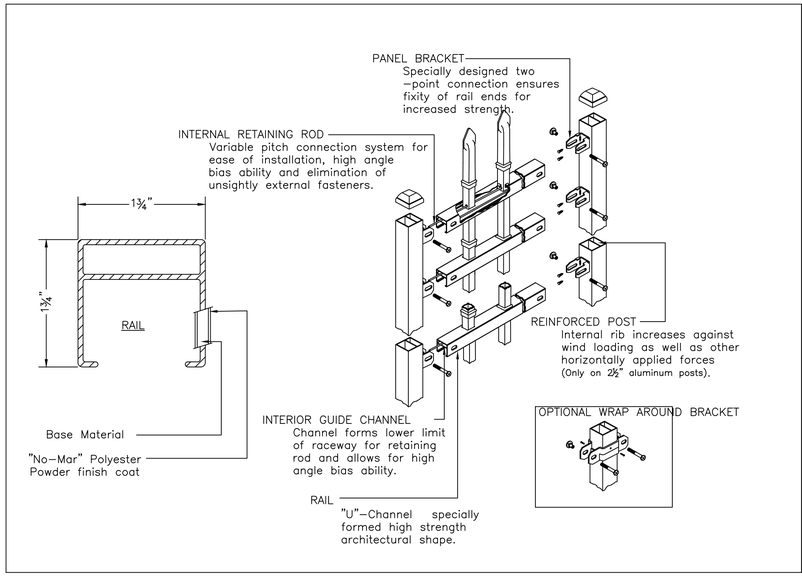

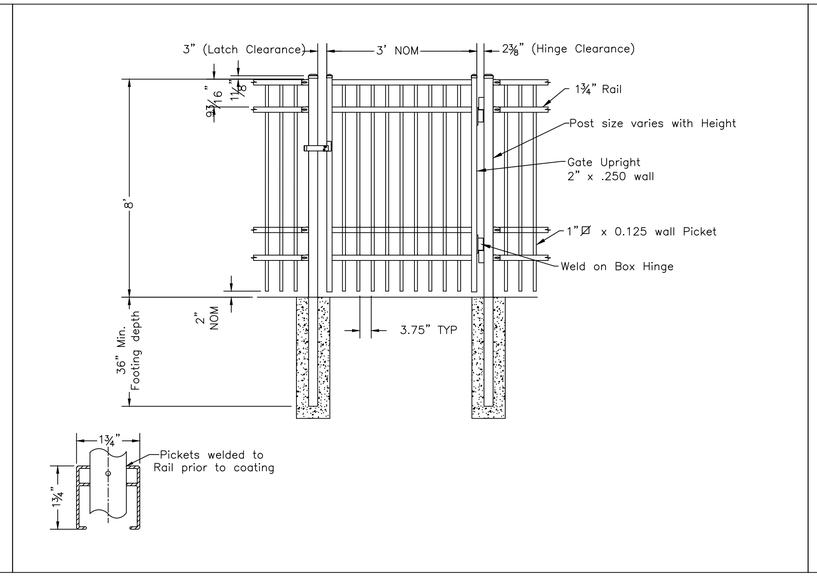

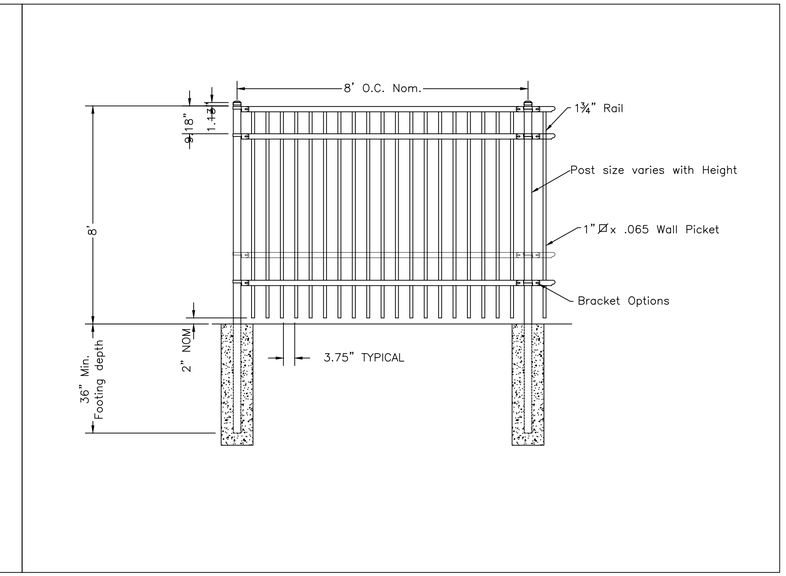

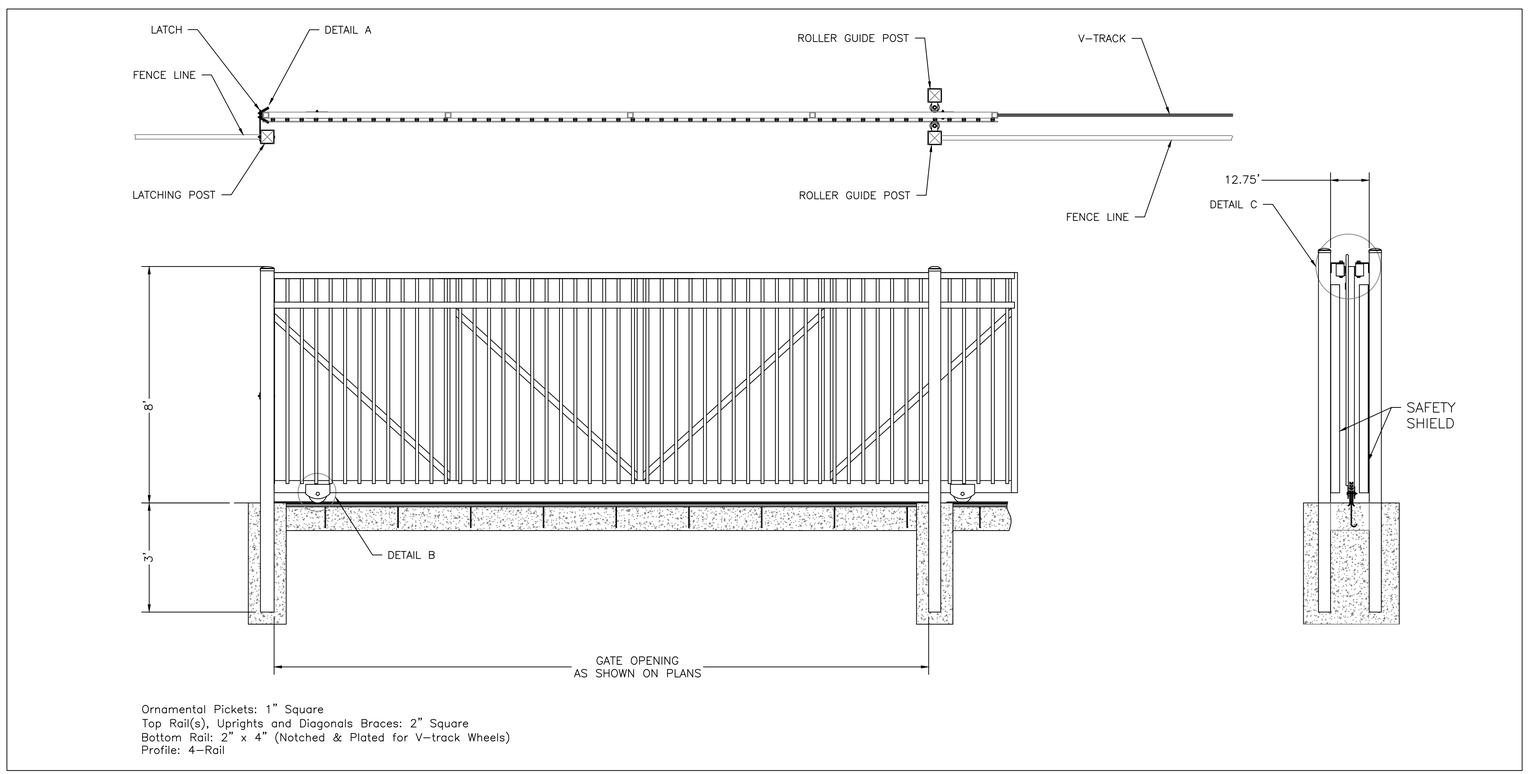

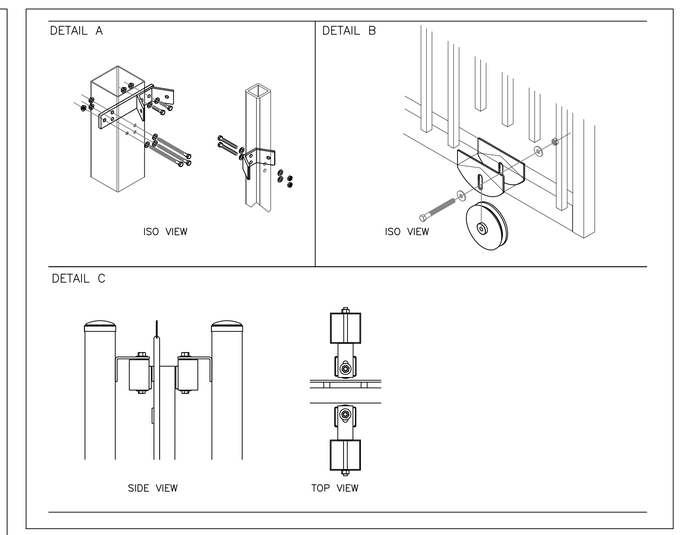

COMMONWEALTH OF VIRGINIA
MATTHEW R. HUSTON
Lic. No. 037897
PROFESSIONAL ENGINEER

Revisions

Rev.	Date	Description	Init.
1			

City of Harrisonburg
Engineering Division
409 S. Main St.
Harrisonburg, VA 22801

Public Safety Building Parking Lot

Details 2

Engineer:	MRH	Scale:	AS SHOWN
Drawn By:	MRH	Date:	January 2022
Checked By:	XXX	Tax Map No:	34–P–1

Sheet Number: 11 of 13

U:\Engineering Projects Comm Dev\Public Safety Building Parking\H–Dwgs\PS–Sheet Set\03 Details.dwg Plotted: 2/28/2022 By: Matthew Huston

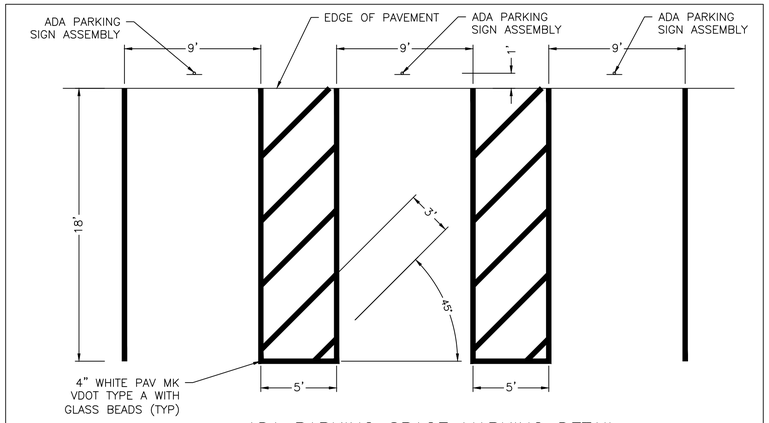

ADA PARKING SPACE MARKING DETAIL
N.T.S.

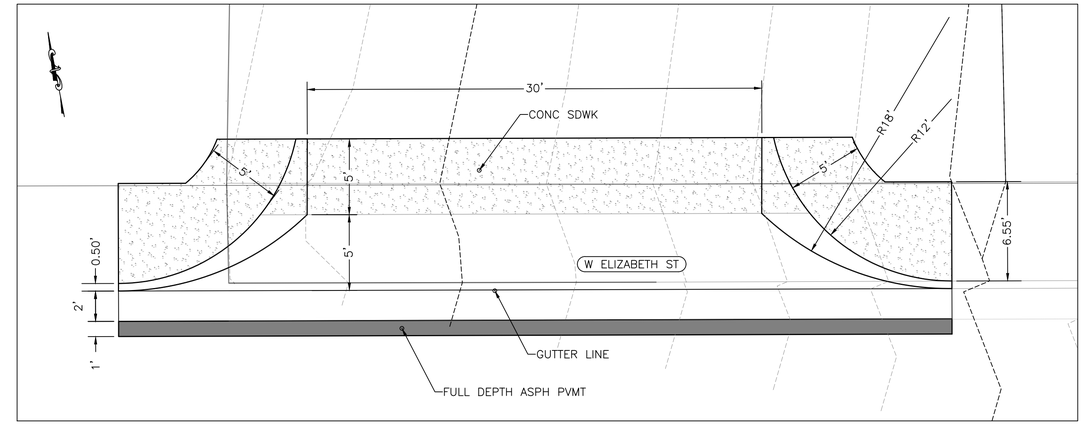

ENTRANCE #1 DETAIL
SCALE: 1" = 5'

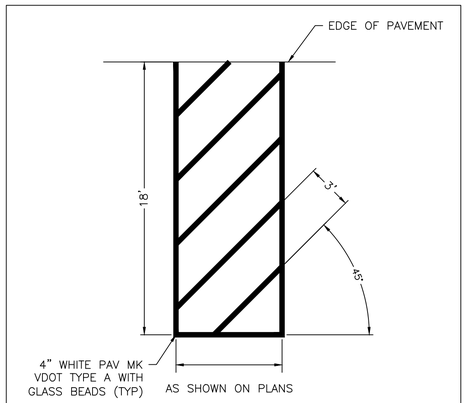

PARKING LOT HATCHED MARKING DETAIL
N.T.S.

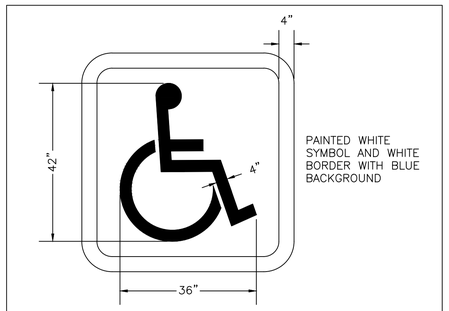

WHEELCHAIR PAVEMENT MARKING DETAIL
N.T.S.

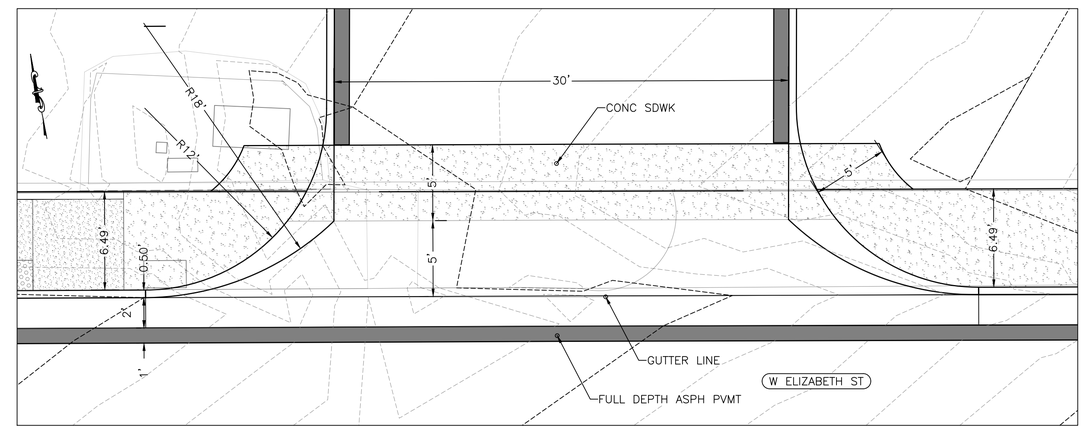

ENTRANCE #2 DETAIL
SCALE: 1" = 5'

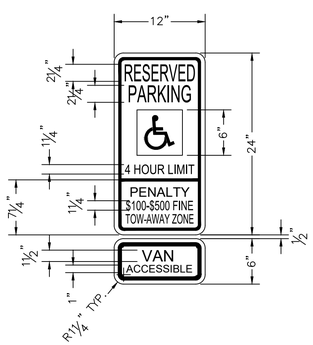

NOTES:

1. SIGN ASSEMBLY AND PLACEMENT SHALL CONFORM TO ICC A117.1–2009
2. SIGN SUPPORT SHALL BE ALUMINUM SQUARE TUBING 2" X 1/8" POWDER–COATED ALUMINUM, COLOR: BLACK, WITH PYRAMID–SHAPED CAP.
3. BOTTOM OF LOWEST SIGN PANEL SHALL BE MINIMUM 60" AND MAXIMUM 84" ABOVE SURFACE OF PARKING LOT.
4. SIGN PANELS SHALL BE ALUMINUM WITH WHITE RETROREFLECTIVE FRONT SURFACE.
5. ALL TEXT SHALL HAVE DIMENSIONS AS SHOWN ON PLANS, COLOR: GREEN.
6. ALL LINES SHALL BE NOMINALLY 3/8" WIDE, COLOR: GREEN.
7. WHEELCHAIR SYMBOL SHALL BE WHITE LINEWORK ON A BLUE FIELD.
8. EACH PANEL SHALL BE ATTACHED TO SIGN SUPPORT WITH TWO 3/8" BOLTS, ONE AT TOP, ONE AT BOTTOM. BOLT HEAD SHALL NOT OBSCURE THE TEXT.
9. FOUNDATION SHALL BE VDOT STP–1 TYPE D.

ADA PARKING SIGN ASSEMBLY DETAIL
N.T.S.

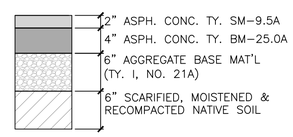

TYPICAL ASPHALT PAVEMENT SECTION
SCALE: N.T.S.

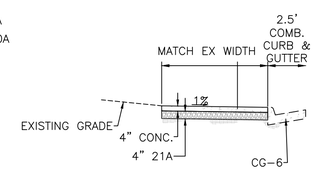

TYPICAL SIDEWALK SECTION
SCALE: N.T.S.

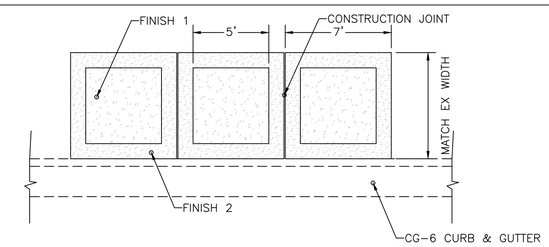

TYPICAL SIDEWALK PLAN
SCALE: N.T.S.

NOTES:

1. CONCRETE FOR SIDEWALK, CURB AND GUTTER SHALL BE CLASS A–3.
2. CONCRETE THICKNESS SHALL BE 4" TYPICAL. FOR CURB RAMPS, THICKNESS SHALL BE INCREASED TO 7".
3. AGGREGATE BASE MATERIAL SHALL BE 4" THICK UNDER 4" SIDEWALK. THICKNESS SHALL BE INCREASED TO 6" UNDER 7" CURB RAMPS, CURB AND GUTTER.
4. EXPANSION JOINTS SHALL BE INSTALLED EVERY 100 FT, AT ALL RADII POINTS AT CONCRETE ENTRANCES AND CURB RETURNS, AND AT LOCATIONS NO LESS THAN 6 FT AND NO MORE THAN 10 FT FROM DROP INLETS. EXPANSION MATERIAL SHALL BE ½" THICK AND SHALL EXTEND THE FULL DEPTH OF CONTACT SURFACE.
5. CONTRACTION JOINTS SHALL BE 1" DEEP BY ⅛" – ¼" WIDE AT INTERVALS EQUAL TO SIDEWALK WIDTH.
6. USE ¼" RADIUS ON ALL EDGES.
7. CURE FOR 72 HOURS USING CURING COMPOUND OR MOISTURE.

COMMONWEALTH OF VIRGINIA
MATTHEW R. HUSTON
Lic. No. 037897
PROFESSIONAL ENGINEER

Revisions

Rev.	Date	Description	Init.
1			

City of Harrisonburg
Engineering Division
409 S. Main St.
Harrisonburg, VA 22801

CITY OF HARRISONBURG VIRGINIA ESTABLISHED 1780

Public Safety Building Parking Lot
Details 3

Engineer:	MRH	Scale:	AS SHOWN
Drawn By:	MRH	Date:	January 2022
Checked By:	XXX	Tax Map No:	34–P–1

Sheet Number: 12 of 13

U:\Engineering Projects Comm Dev\Public Safety Building Parking\H-Dwgs\PS-Sheet Set\03 Details.dwg Plotted: 2/28/2022 By: Matthew Huston

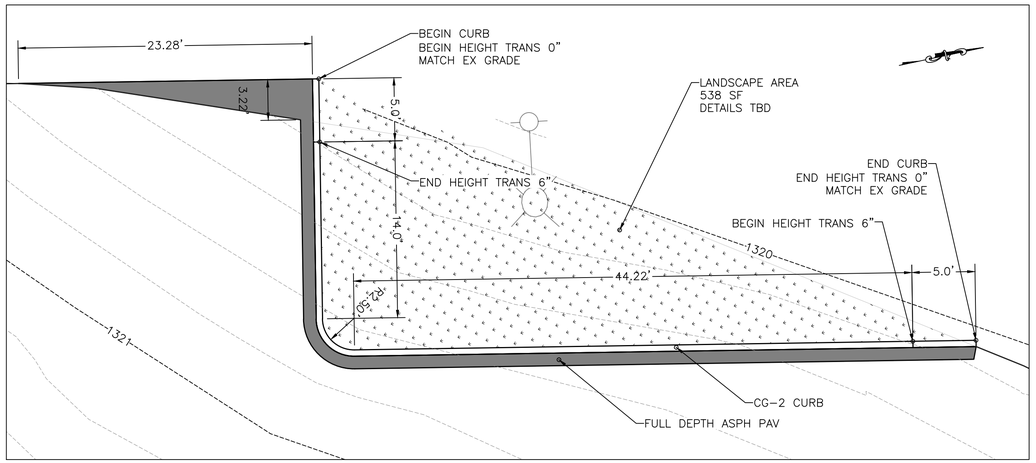

A
14

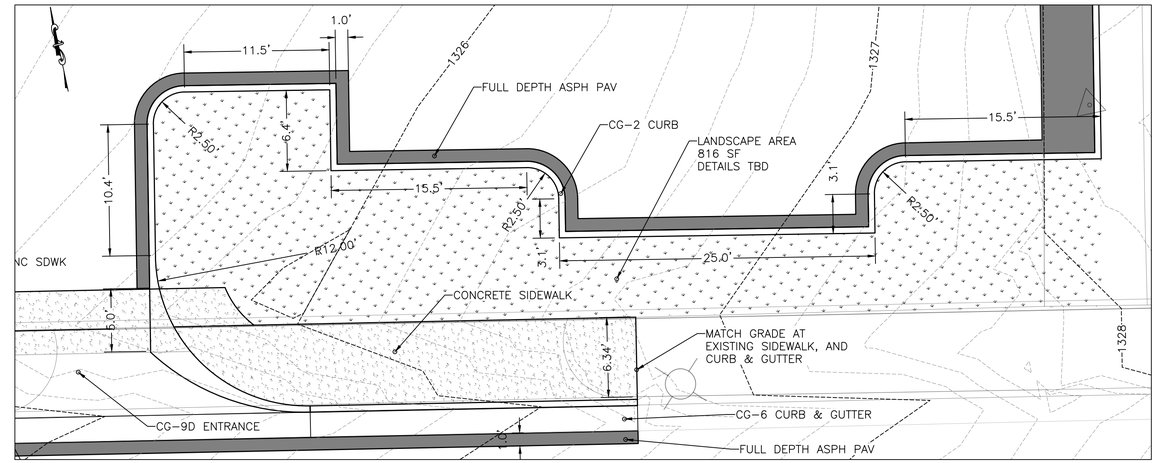

F
14

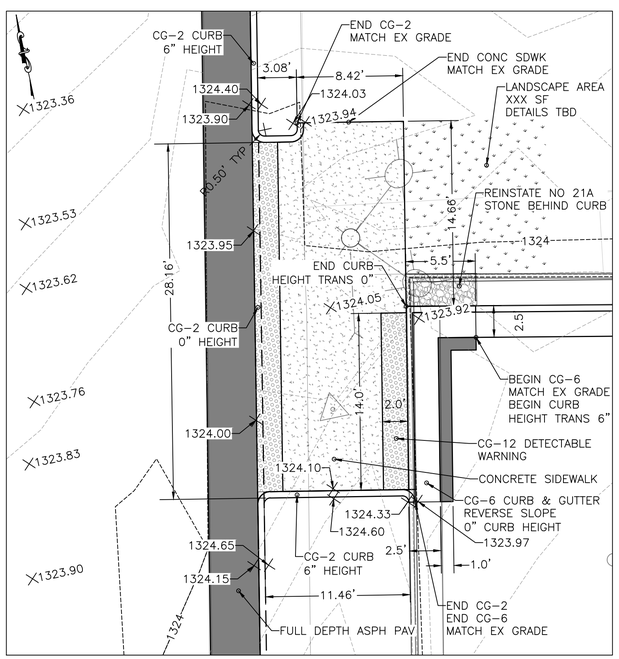

D
14

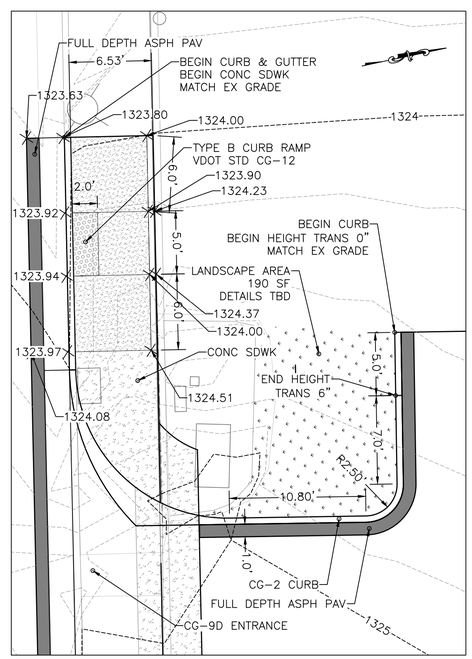

E
14

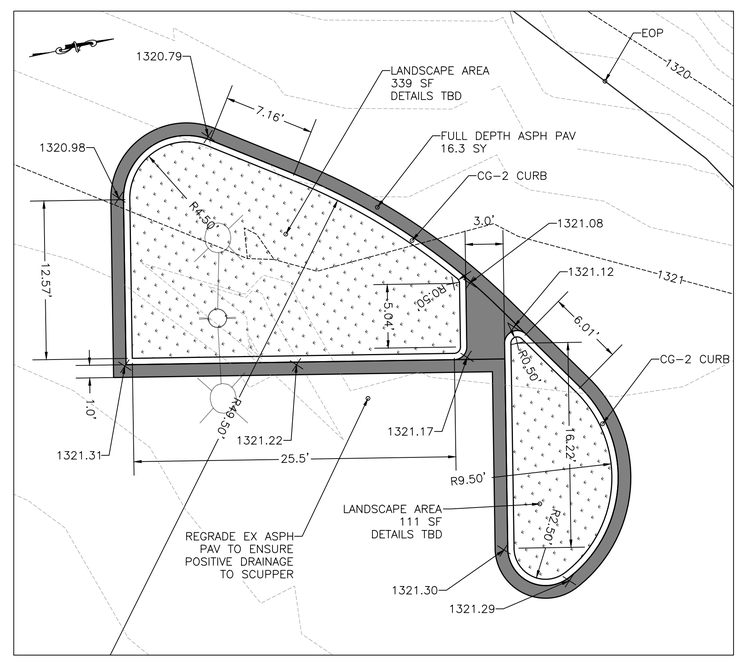

B
14

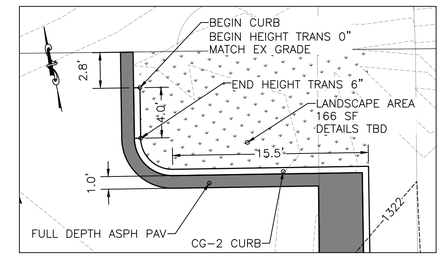

C
14

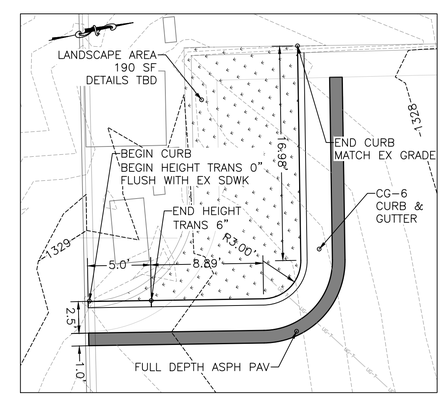

G
14

0 5 10 Feet

COMMONWEALTH OF VIRGINIA
MATTHEW R. HUSTON
Lic. No. 037897
PROFESSIONAL ENGINEER

Revisions			
Rev.	Date	Description	Init.
1			

City of Harrisonburg
Engineering Division
409 S. Main St.
Harrisonburg, VA 22801

CITY OF HARRISONBURG VIRGINIA ESTABLISHED 1780

Public Safety Building Parking Lot

Details 4

Engineer:	MRH	Scale:	1" = 5'
Drawn By:	MRH	Date:	January 2022
Checked By:	XXX	Tax Map No:	34-P-1

Sheet Number: 13 of 13

U:\Engineering Projects Comm Dev\Public Safety Building Parking\H-Dwgs\PS-Sheet Set\03 Details.dwg Plotted: 2/28/2022 By: Matthew Huston