CITY OF HARRISONBURG, VIRGINIA
DEPARTMENT OF PUBLIC WORKS

PROPOSED BRIDGE SUBSTRUCTURE REPAIR OF MARTIN LUTHER KING, JR. WAY (CANTRELL AVE.) OVER BLACKS RUN, NS RWY. & CHESAPEAKE AVE.

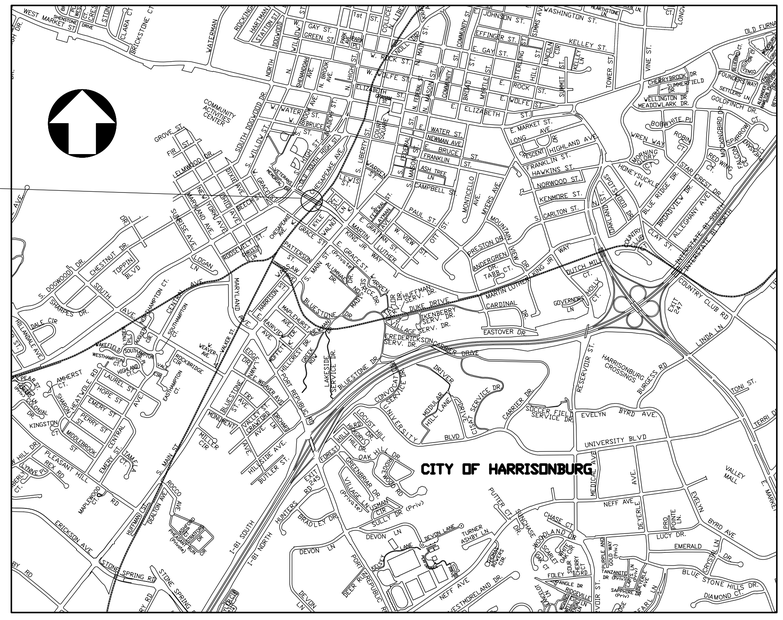

LOCATION MAP
NOT TO SCALE

CITY OFFICIALS

MAYOR	DEANNA R. REED
CITY MANAGER	ERIC D. CAMBELL
DEPUTY CITY MANAGER	ANDE BANKS
CITY ENGINEER	DANIEL J. RUBLEE
DIR. OF PUBLIC WORKS	THOMAS A. HARTMAN
DIR. OF PUBLIC UTILITY	A. MICHAEL COLLINS

GENERAL CONSTRUCTION NOTE :

THIS PROJECT SHALL BE CONSTRUCTED IN ACCORDANCE WITH SUPPLEMENTAL SPECIFICATIONS, VDOT ROAD AND BRIDGE SPECIFICATIONS DATED 2020 AND CURRENT REVISIONS AND VDOT ROAD AND BRIDGE STANDARDS, 2016.

LEGEND:

- EXISTING OBJECT LINES
- PROPOSED OBJECT LINES
- EXISTING REINF. STEEL
- PROPOSED REINF. STEEL
- CUTTING PLANE LINE
- CENTER LINE
- HIDDEN LINES

CADD REFERENCE NO. COVER.dwg

PLANS REVISED	
SHEET NO.	DATE:

COMMONWEALTH OF VIRGINIA
R.W. SCHWARTZ
Lic. No. 4291
10-5-21
PROFESSIONAL ENGINEER

COMM. NO. 18028

SCHWARTZ & ASSOCIATES, INC.
CONSULTING ENGINEERS
7331 TIMBERLAKE ROAD
LYNCHBURG, VA.

MARTIN LUTHER KING JR. WAY
OVER BLACKS RUN, N.S. RWY. &
CHESAPEAKE AVE.
CITY OF HARRISONBURG, VA.
COVER SHEET

DESIGNED BY: RES	DRAWN BY: RES	CHECKED BY: RWS
SCALE: AS SHOWN		PROJECT NO.:
DATE: OCTOBER 5, 2021		SHEET 1 OF 12

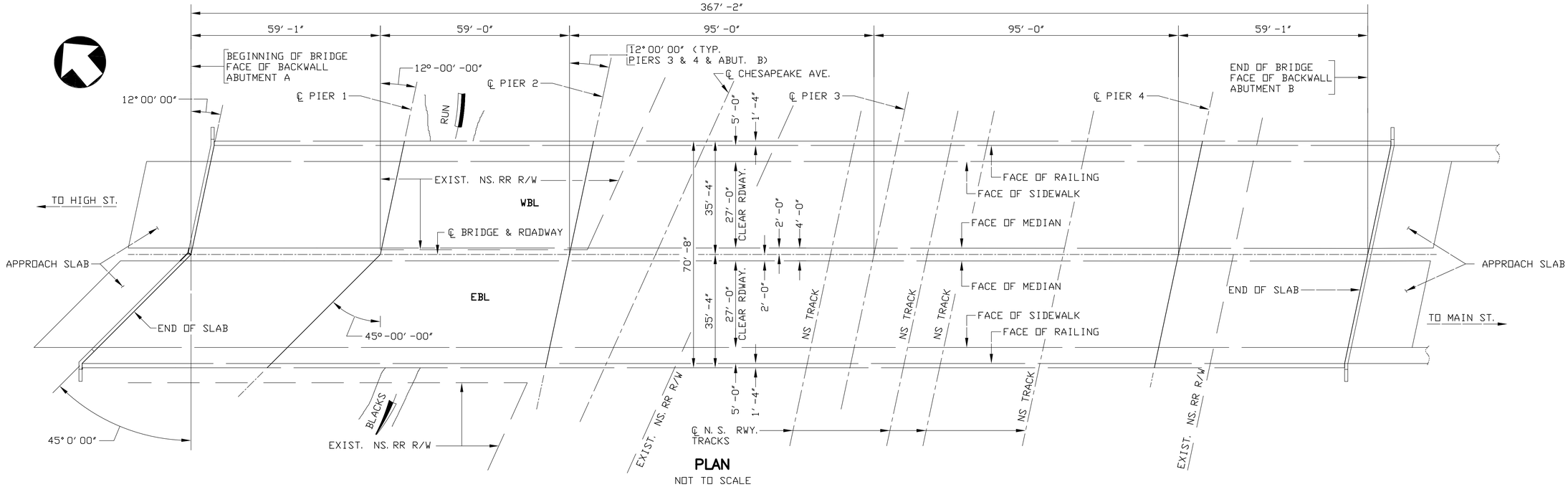

PLAN

NOT TO SCALE

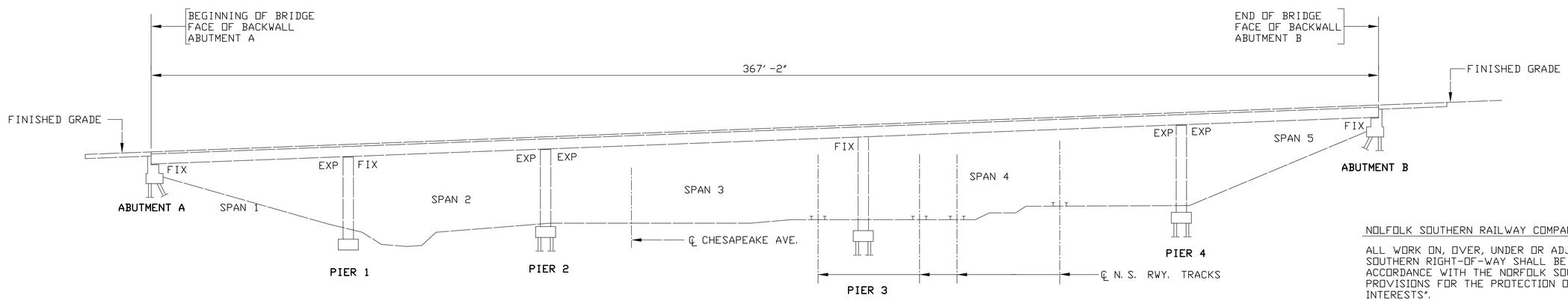

DEVELOPED ELEVATION

NOT TO SCALE

NOLFOLK SOUTHERN RAILWAY COMPANY NOTES:

ALL WORK ON, OVER, UNDER OR ADJACENT TO NORFOLK SOUTHERN RIGHT-OF-WAY SHALL BE DONE IN ACCORDANCE WITH THE NORFOLK SOUTHERN "SPECIAL PROVISIONS FOR THE PROTECTION OF RAILWAY INTERESTS".

A MINIMUM VERTICAL CLEARANCE OF 22'-0" ABOVE TOP OF HIGHEST RAIL AND A MINIMUM HORIZONTAL CLEARANCE OF 14'-0" SHALL BE MAINTAINED AT ALL TIMES.

THE CONTRACTOR SHALL PROVIDE FOR REVIEW AND APPROVAL CONSTRUCTION SUBMITTALS, DETAILING MEANS AND METHODS OF THE PROPOSED WORK, IN ACCORDANCE WITH THE PROJECT MANUAL AND OTHER SPECIFICATIONS.

INDEX OF DRAWINGS

PROJECT	SHEET NO.	DESCRIPTION
MARTIN LUTHER KING JR. WAY OVER BLACKS RUN, NS RWY. & CHESAPEAKE AVE. STR. NO. 8000	1	COVER
	2	PLAN, ELEVATION AND INDEX
	3	QUANTITIY TABLE & GENERAL NOTE
	4	GENERAL NOTES CONT. & TRANSVERSE SECTION
	5	MISCELLANEOUS DETAILS
	6	EXPANSION SLOT ENLARGEMENT
	7	EXP. SLOT ENLARGEMENT CONT.
	8	BEARING REPLACEMENT
	9	BEARING REPLACEMENT CONT. & NOTES
	10	BEARING DETAILS
	11	TRAFFIC CONTROL LAYOUT - OUTSIDE LANE CLOSURE
	12	TRAFFIC CONTROL LAYOUT - INSIDE LANE CLOSURE

COMMONWEALTH OF VIRGINIA
R.W. SCHWARTZ
Lic. No. 4291
10-5-21
PROFESSIONAL ENGINEER

SCHWARTZ & ASSOCIATES, INC.
CONSULTING ENGINEERS
7331 TIMBERLAKE ROAD
LYNCHBURG, VA.

MARTIN LUTHER KING JR. WAY OVER BLACKS RUN, N.S. RWY. & CHESAPEAKE AVE.
CITY OF HARRISONBURG, VA.
PLAN, ELEVATION & INDEX

DESIGNED BY: RES	DRAWN BY: RES	CHECKED BY: RWS
SCALE: AS SHOWN	PLAN NO.:	
COMM. NO. 18028	DATE: OCTOBER 5, 2021	SHEET: 2 OF 12

CADD REFERENCE NO.: 18028BRIDGE

ESTIMATED QUANTITIES

	MOBILIZATION	MAINTENANCE OF TRAFFIC -"MLK"	FLOWABLE FILL REPAIR	ENLARGE EXPANSION BEARING SLOTS (PER BEARING)	JACKING & BLOCKING BEAM	⊕ ANCHOR BOLT REPLACEMENT	⊕ BEARING REPLACEMENT	SHOTCRETE TYPE A	CONCRETE SUBSTRUCTURE SURFACE REPAIR	* ZONE COATING OF EXISTING STRUCTURE (STR. #8000), TYPE B	ENVIRONMENTAL PROTECTION, HEALTH & SAFETY (STR. #8000)	DISPOSAL OF MATERIAL (STR. #8000), TYPE B	GENERAL MAINTENANCE
	LUMP SUM	LUMP SUM	LUMP SUM	EACH	EACH	EACH	EACH	SQ. FT.	SQ. YDS.	LUMP SUM	LUMP SUM	LUMP SUM	LUMP SUM
TOTALS	LUMP SUM	LUMP SUM	LUMP SUM	24	29	48	24	558	77	LUMP SUM	LUMP SUM	LUMP SUM	LUMP SUM

⊕ - DENOTES ITEMS TO BE PAID FOR ON BASIS OF PLAN QUANTITIES IN ACCORDANCE WITH CURRENT ROAD AND BRIDGE SPECS.

* - 7,000± SQUARE FEET OF EXISTING PAINT REMOVAL - FOR ESTIMATING PURPOSES ONLY.

GENERAL NOTES

I. SPECIFICATIONS:

VIRGINIA DEPARTMENT OF TRANSPORTATION ROAD AND BRIDGE SPECIFICATIONS, 2020

STANDARDS: VA. DEPT. OF TRANSPORTATION ROAD AND BRIDGE STANDARDS, 2016

II. GENERAL:

THESE PLANS ARE INCOMPLETE UNLESS ACCOMPANIED BY THE SUPPLEMENTAL SPECIFICATIONS, SPECIAL PROVISIONS INCLUDED IN THE CONTRACT DOCUMENTS.

THIS PROJECT IS TO BE CONSTRUCTED IN ACCORDANCE WITH THE VIRGINIA DEPARTMENT OF TRANSPORTATION WORK AREA PROTECTION MANUAL, 2011 & LATEST REVISIONS.

DETAILS OF EXISTING STRUCTURE SHOWN ON PLAN NUMBERS 224-17, STR. NO. 8000 ON FILE AT VDOT, STAUNTON DISTRICT OFFICE.

BEAMS ARE NUMBERED LEFT TO RIGHT (1-12) LOOKING FROM ABUTMENT A TOWARD ABUTMENT B.

DIMENSIONS OF EXISTING STRUCTURES SHOWN ON THE PLANS ARE TAKEN FROM AS-BUILT DRAWINGS DATED JANUARY 1970. THE CONTRACTOR SHALL VERIFY IN THE FIELD ALL DIMENSIONS NECESSARY FOR CONSTRUCTION OF THE PROJECT.

BEFORE PROCEEDING WITH ANY WORK WITHIN OR ADJACENT TO THE EXISTING STRUCTURE, THE CONTRACTOR SHALL BECOME FAMILIAR WITH EXISTING CONDITIONS. DURING CONSTRUCTION OPERATIONS, IT SHALL BE THE CONTRACTOR'S RESPONSIBILITY TO MAINTAIN THE INTEGRITY OF THE EXISTING STRUCTURE WHERE THE EXISTING STRUCTURE IS MODIFIED TO ACCOMMODATE NEW CONSTRUCTION, AND TO PROTECT FROM DAMAGE THOSE PORTIONS OF THE STRUCTURE WHICH ARE TO REMAIN.

THE USE OF STAY-IN-PLACE FORMS WILL NOT BE PERMITTED.

THE CONTRACTOR SHALL PROVIDE ENGINEER SAFE ACCESS TO ALL AREAS OF WORK THROUGHOUT COURSE OF RECONSTRUCTION AND FOR FINAL INSPECTION AFTER WORK IS COMPLETE.

CONTRACTOR SHALL TAKE EXTREME CAUTION IN HIS OPERATIONS SO THAT NO DAMAGE IS DONE TO UTILITIES IN THE VICINITY OF BRIDGE OR ON THE BRIDGE.

THE CONTRACTOR SHALL VERIFY, IN FIELD ALL DIMENSIONS, SKEW AND ELEVATIONS BEFORE BEGINNING CONSTRUCTION.

III. TRAFFIC CONTROL:

A TRUCK MOUNTED ATTENUATOR (TMA) SHALL BE USED ON THIS PROJECT IF TOOLS OR EQUIPMENT ARE LEFT IN THE LANE CLOSURE DURING NON-WORKING HOURS.

IV. CONCRETE

CONCRETE IN SUBSTRUCTURE SHALL BE CLASS A4 POST & RAIL OR SHOTCRETE TYPE A, AS NOTED IN THE PLANS.

FLOWABLE FILL SHALL BE A CURRENT APPROVED VDOT MIX.

ALL CAST-IN-PLACE CONCRETE SHALL BE BONDED TO HARDENED CONCRETE WITH ARMATEC 110 BONDING EPOXY. SHOTCRETE REPAIRS WILL NOT REQUIRE BONDING EPOXY.

IN AREAS OF THE STRUCTURE WHERE EXISTING CONCRETE IS TO BE REMOVED AND REPLACED BY NEW CLASS A4 CONCRETE OR SHOTCRETE THE REQUIREMENTS OF SECTION 412 OF THE SPECIFICATIONS SHALL APPLY.

WITHIN TWENTY FOUR HOURS PRIOR TO PLACING NEW CONCRETE, EXPOSED REINFORCING STEEL AND FACES OF EXISTING CONCRETE SHALL BE CLEANED BY ABRASIVE BLAST CLEANING. REINFORCING STEEL SHALL BE BLASTED UNTIL CORRODED STEEL MATERIAL AND FOREIGN MATERIAL ARE REMOVED TO CLEAN WHITE METAL. CONCRETE MATERIAL SHALL BE BLASTED FOR A TIME SUFFICIENT TO EXPOSE SOUND CONCRETE AND COARSE AGGREGATE.

ALL COSTS RELATED TO BONDING EPOXY SHALL BE INCLUDED IN COST BID FOR THAT CONCRETE ITEM.

THE LOCATIONS AND LIMITS OF ALL REPAIRS SHALL BE DETERMINED BY THE ENGINEER.

CONTRACTOR SHALL EXERCISE EXTREME CAUTION WHEN REMOVING EXISTING CONCRETE SO THAT NONE OF THE PORTION OF THE STRUCTURE OR REINFORCING STEEL TO REMAIN IN PLACE IS DAMAGED. ALL EXISTING CONCRETE THAT IS REMOVED IN SUBSTRUCTURE SHALL BE REMOVED WITH PNEUMATIC HAMMER (MAXIMUM WEIGHT 35 LBS.) EXCEPT 15 LB. MAXIMUM WEIGHT HAMMER FOR DOING FINAL TRIM WORK.

1. BLASTING - GENERAL

ALL CONCRETE AREAS BLASTED SHALL BE BLASTED FOR A TIME SUFFICIENT TO EXPOSE SOUND CONCRETE AND COARSE AGGREGATE, UNLESS OTHERWISE NOTED. THEY SHALL BE BLASTED USING AN ABRASIVE MATERIAL.

ALL REINFORCING STEEL AREAS BLASTED SHALL BE BLASTED UNTIL ALL CONCRETE, RUST, SCALE, CORRODED STEEL MATERIAL AND FOREIGN MATERIAL ARE REMOVED TO CLEAN WHITE METAL.

2. BLASTING - FOR BONDING EPOXY

BLASTING, PRIOR TO APPLICATION OF BONDING EPOXY, SHALL BE TO A MEDIUM FINISH THAT IS ONE SUFFICIENT TO GENERALLY EXPOSE COARSE AGGREGATE WITH SLIGHT REVEAL - MAXIMUM REVEAL 1/4 INCH.

V. REINFORCING STEEL:

GREAT CARE SHALL BE TAKEN DURING THE REMOVAL OF CONCRETE IN THE SUBSTRUCTURE IN ORDER THAT THE EXISTING REINFORCING STEEL TO BE RE-USED IS NOT DAMAGED.

ANY EXISTING REINFORCING STEEL THAT IS TO REMAIN IN STRUCTURE AND IS DAMAGED IN SUPERSTRUCTURE & SUBSTRUCTURE REMODELING, AS DETERMINED BY THE ENGINEER, SHALL BE CORRECTED AT THE CONTRACTOR'S EXPENSE.

ALL EXPOSED REINFORCING STEEL IN CONCRETE REMODELING AREAS SHALL BE BLASTED AND COVERED WITH BONDING EPOXY IMMEDIATELY PRIOR TO RECASTING CONCRETE.

VI. STRUCTURAL STEEL:

GREAT CARE SHALL BE TAKEN DURING THE REMOVAL OF CONCRETE IN THE SUBSTRUCTURE IN ORDER THAT THE EXISTING REINFORCING STEEL TO BE RE-USED IS NOT DAMAGED.

ALL STRUCTURAL STEEL SHALL BE CLEANED AND PAINTED IN ACCORDANCE WITH SECTION 411, OF VDOT ROAD & BRIDGE SPECIFICATION, 2020 AND CURRENT REVISIONS, DRAWINGS & SPECIAL PROVISIONS.

FINISH PAINT SHALL BE GRAY - 595-26307 (SEMI-GLOSS), USE PAINT SYSTEM "B". IN ADDITION TO THE REQUIREMENT OF SECTION 411, VDOT ROAD & BRIDGE SPECIFICATIONS, 2020 AND CURRENT REVISIONS.

ALL STRUCTURAL STEEL WITHIN VERTICAL PLANES PLACED 5 FEET HORIZONTALLY IN EACH DIRECTION FROM CENTERLINE OF BEARINGS AT ABUTMENTS, PIERS 1, 2 & 4, BOTTOM OF BOTTOM BEAM FLANGE - BEAM #9, SPAN 2 (5'± LENGTH) & BOTTOM OF BOTTOM BEAM FLANGE - BEAM #2, SPAN 4 (5'± LENGTH) SHALL BE GIVEN A NEAR WHITE BLAST CLEANING (SSPC-SP10) AND THEN PAINTED IN ACCORDANCE WITH REQUIREMENTS OF THE SPECIFICATIONS.

THE EXISTING STRUCTURE IS CLASSIFIED AS A TYPE "B" STRUCTURE WITH REFERENCE TO IT'S STRUCTURAL STEEL COATING.

THE CONTRACTOR SHALL IMMEDIATELY NOTIFY THE ENGINEER OF ANY CRACKS FOUND IN STRUCTURAL STEEL WHILE WORKING ON THIS PROJECT.

VII. EPOXIES:

ALL NEW CONCRETE CAST IN STRUCTURE SHALL BE BONDED TO EXISTING CONCRETE WITH BONDING EPOXY. BONDING EPOXY USED ON STRUCTURE SHALL BE SIKA ARMATEC 110 (OR APPROVED EQUIVALENT) UNLESS OTHERWISE NOTED ON PLANS.

ALL COSTS RELATED TO BONDING CONSTRUCTION JOINTS, AS SHOWN ON THESE CONTRACT DRAWINGS, SHALL BE INCLUDED IN COST BID FOR OTHER ITEMS.

VIII. INCIDENTALS:

THE LOCATIONS OF EXISTING UTILITIES, INCLUDING UNDERGROUND UTILITIES, IS INDICATED ON THE DRAWINGS INSOFAR AS THEIR EXISTENCE AND LOCATION WERE KNOWN AT THE TIME OF PREPARATION OF THE DRAWINGS. HOWEVER, NOTHING IN THESE CONTRACT DOCUMENTS SHALL BE CONSTRUED AS A GUARANTEE THAT SUCH UTILITIES ARE IN THE LOCATION INDICATED OR THAT THEY ACTUALLY EXIST, OR THAT OTHER UTILITIES ARE NOT WITHIN THE AREA OF OPERATIONS. THE CONTRACTOR SHALL MAKE ALL NECESSARY INVESTIGATIONS TO DETERMINE THE EXISTENCE AND LOCATIONS OF SUCH UTILITIES. THE CONTRACTOR SHALL PAY FOR ANY DAMAGE TO AND FOR MAINTENANCE AND PROTECTION OF EXISTING UTILITIES AND STRUCTURES.

ANY DAMAGED SHRUBS, FLOWERS, ETC. SHALL BE REPLACED WITH THE ORIGINAL SIZE AND TYPE THAT WAS DAMAGED, AS DIRECTED BY THE ENGINEER. ALL COSTS SHALL BE PAID FOR BY THE CONTRACTOR.

THE COSTS OF ANY NECESSARY CONSTRUCTION SURVEYING SHALL BE INCLUDED IN UNIT PRICE BID FOR OTHER ITEMS IN CONTRACT.

ALL TEMPORARY EROSION & SILTATION CONTROL SHALL BE IN ACCORDANCE WITH VIRGINIA EROSION & SEDIMENT CONTROL HANDBOOK & THESE DRAWINGS & CONTRACT DOCUMENTS.

ALL COSTS FOR EROSION & SILTATION CONTROL ITEMS, AS DIRECTED BY THE ENGINEER, SHALL BE INCLUDED IN OTHER BID ITEMS.

CONTRACTOR SHALL REMOVE DEBRIS OFF TOP OF ALL ABUTMENT SEATS AND PIER CAPS, AT THE COMPLETION OF THIS PROJECT. ALL COSTS SHALL BE INCLUDED IN OTHER BID ITEMS.

ALL COSTS FOR GRADING, SHAPING, SEEDING, FERTILIZING, LIMING, OVER SEEDING, FURNISHING & PLACING TOPSOIL AND MULCHING IN DISTURBED AREAS ON THIS PROJECT SHALL BE INCLUDED IN OTHER BID ITEMS.

IX. RAILROAD REQUIREMENTS:

CONTRACTOR WILL NOT BE ALLOWED TO PERFORM ANY WORK ON, OVER, UNDER OR ADJACENT TO THE RAILWAY'S RIGHT OF WAY UNTIL THE FOLLOWING HAS BEEN DONE:

- CONTRACTOR'S INSURANCE REQUIREMENTS HAVE BEEN SATISFIED (THROUGH RISK MANAGEMENT DEPARTMENT, NSRISK3@nscorp.com).
- NORFOLK SOUTHERN RIGHT OF ENTRY AGREEMENT HAS BEEN FULLY EXECUTED BY THE CONTRACTOR.
- A CONTRACTOR SCHEDULED RAILROAD PRE-CONSTRUCTION MEETING HAS BEEN HELD WITH RAILROAD REPRESENTATIVES IN ATTENDANCE.
- RAILROAD PROTECTION AROUND THE TRACKS HAS BEEN PROVIDED OR SCHEDULED, AS DETERMINED BY THE NS SUPERVISOR.
- THE CHECK LIST FOR CONSTRUCTION HAS BEEN EXECUTED BY ALL PARTIES; AND A LETTER OF AUTHORIZATION TO PROCEED IS ISSUED BY THE OFFICE OF ENGINEER PUBLIC IMPROVEMENTS, NORFOLK SOUTHERN CORP.
- ALL REQUIREMENTS HAVE BEEN MEET IN ACCORDANCE WITH THE NORFOLK SOUTHERN RAILROAD SPECIAL PROVISION THAT IS IN THE "PROJECT MANUAL".
- RAILROAD CONTACT IS: Salome Uwizerimana (salome.uwizerimana@stvinc.com) of STV at (678) 257-6155.

COMMONWEALTH OF VIRGINIA
R.W. SCHWARTZ
Lic. No. 4291
10-5-21
PROFESSIONAL ENGINEER

SCHWARTZ & ASSOCIATES, INC.
CONSULTING ENGINEERS
7331 TIMBERLAKE ROAD
LYNCHBURG, VA.

MARTIN LUTHER KING JR. WAY OVER BLACKS RUN, N.S. RWY. & CHESAPEAKE AVE.
CITY OF HARRISONBURG, VA.
QUANTITY TABLE & GENERAL NOTES

DESIGNED BY: RES	DRAWN BY: RES	CHECKED BY: RWS
SCALE: AS SHOWN	PLAN NO.:	
COMM. NO. 18028	DATE: OCTOBER 5, 2021	SHEET: 3 OF 12

CADD REFERENCE NO: 18028BRIDGE

GENERAL NOTES CONT.

IX. OPERATIONS:

A. FLOWABLE FILL REPAIR:

FLOWABLE FILL REPAIR SHALL BE COMPLETED IN ONE CONTINUOUS OPERATION.

B. ENLARGE EXPANSION BEARING SLOTS:

ENLARGEMENT OF EXPANSION BEARING SLOTS SHALL BE COMPLETED IN NO MORE THAN TWO CONTINUOUS OPERATION.

C. JACKING & BLOCKING BEAM:

JACKING & BLOCKING BEAM SHALL BE COMPLETED IN NO MORE THAN FOUR CONTINUOUS OPERATIONS.

D. ANCHOR BOLT REPLACEMENT:

ANCHOR BOLT REPLACEMENT SHALL BE COMPLETED IN NO MORE THAN FOUR CONTINUOUS OPERATIONS.

E. BEARING REPLACEMENT:

BEARING REPLACEMENT SHALL BE COMPLETED IN NO MORE THAN TWO CONTINUOUS OPERATIONS.

F. SHOTCRETE, TYPE A:

THE CONTRACTOR SHALL PREPARE 50% OF THE SHOTCRETE AREAS SO THAT THEY WILL BE READY FOR VIEWING AT ONE TIME. CONTRACTOR SHALL THEN SHOTCRETE 50% OF THE TOTAL AREAS IN ONE CONTINUOUS OPERATION.

G. CONCRETE SUBSTRUCTURE SURFACE REPAIR:

THE CONTRACTOR SHALL PREPARE 25% OF THE CONCRETE SUBSTRUCTURE REPAIR AREAS SO THAT THEY WILL BE READY FOR VIEWING AT ONE TIME. CONTRACTOR SHALL THEN PLACE CONCRETE IN 25% OF THE TOTAL AREAS IN ONE CONTINUOUS OPERATION.

H. PAINT - STRUCTURAL STEEL:

- CLEANING - CONTRACTOR SHALL CLEAN STRUCTURAL STEEL IN NO MORE THAN THREE CONTINUOUS OPERATIONS.
- PRIME COAT - CONTRACTOR SHALL PRIME STRUCTURAL STEEL IN NO MORE THAN THREE CONTINUOUS OPERATIONS.
- INTERMEDIATE COAT - CONTRACTOR SHALL APPLY INTERMEDIATE COAT IN NO MORE THAN ONE CONTINUOUS OPERATION.
- FINISH COAT - CONTRACTOR SHALL APPLY FINISH COAT IN NO MORE THAN ONE CONTINUOUS OPERATION.

SEQUENCE OF CONSTRUCTION

STAGE 1:

1. INSTALL TRAFFIC CONTROL.
2. START ANCHOR BOLT REPLACEMENT.
3. JACKING & BLOCKING BEAMS
4. BEARING REPLACEMENT
5. REMOVE JACKING & BLOCKING AND COMPLETE ANCHOR BOLT REPLACEMENT.
6. CONCRETE SUBSTRUCTURE SURFACE REPAIR.
7. SHOTCRETE, TYPE A
8. ENLARGE EXPANSION BEARING SLOTS.
9. FLOWABLE FILL REPAIR.
10. PAINT STRUCTURAL STEEL (ITEMS 2 - 9 SHALL BE COMPLETED BEFORE ANY PAINTING OF STRUCTURAL CAN BE STARTED).
11. COMPLETE ALL INCIDENTALS.
12. REMOVE TRAFFIC CONTROL.
13. GENERAL CLEAN UP.

UNLESS OTHERWISE APPROVED OR DIRECTED BY THE ENGINEER, THE CONTRACTOR SHALL PLAN AND PROSECUTE WORK IN ACCORDANCE WITH THE ABOVE NOTED CONSTRUCTION SEQUENCE.

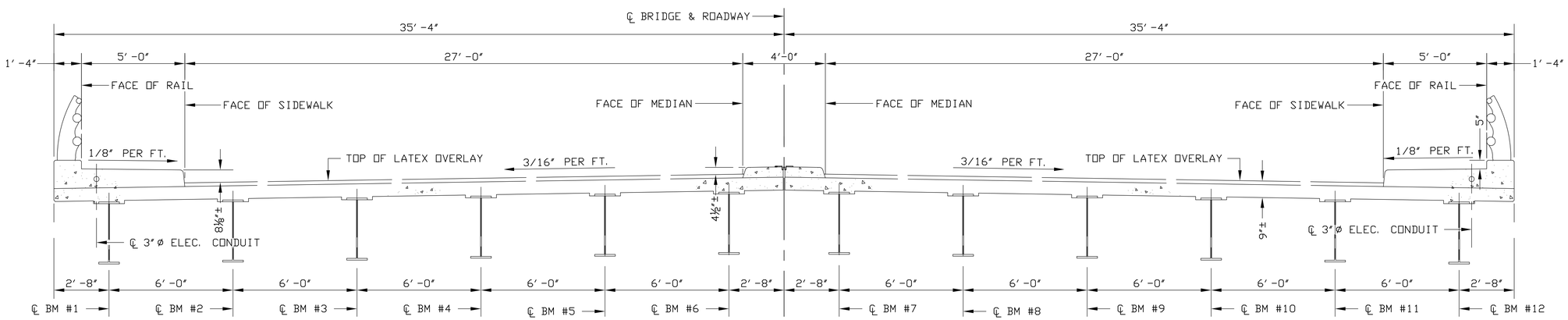

TRANSVERSE SECTION
(REINFORCING STEEL NOT SHOWN)
NOT TO SCALE

COMMONWEALTH OF VIRGINIA
R.W. SCHWARTZ
Lic. No. 4291
10-5-21
PROFESSIONAL ENGINEER

SCHWARTZ & ASSOCIATES, INC.
CONSULTING ENGINEERS
7331 TIMBERLAKE ROAD
LYNCHBURG, VA.

MARTIN LUTHER KING JR. WAY OVER BLACKS RUN, N.S. RWY. & CHESAPEAKE AVE.
CITY OF HARRISONBURG, VA.
GENERAL NOTES CONT. & TRANSVERSE SECTION

DESIGNED BY: RES	DRAWN BY: RES	CHECKED BY: RWS
SCALE: AS SHOWN		PLAN NO.:
COMM. NO. 18028	DATE: OCTOBER 5, 2021	SHEET: 4 OF 12

CADD REFERENCE NO.: 18028BRIDGE

TYPICAL DETAIL OF SHOTCRETE - TYPE A

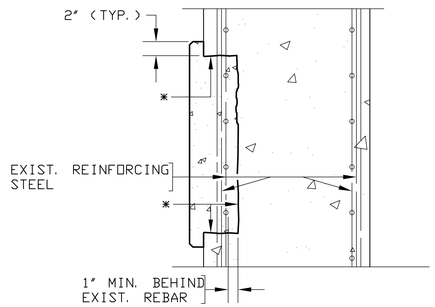

* - REMOVE EXISTING CONCRETE TO THIS LINE.

TYPICAL SECTION
NOT TO SCALE

NOTES ON SHOTCRETE - TYPE A

SHOTCRETE SHALL BE USED TO COVER EXPOSED REINFORCING STEEL, AREAS WHERE REINFORCING STEEL IS CORRODED, AND OTHER AREAS OF CONCRETE DETERIORATION, AS DIRECTED BY THE ENGINEER.

REMOVE EXISTING CONCRETE TO SOUND CONCRETE AND IN AREAS OF CORRODED REINFORCING, AS DIRECTED BY THE ENGINEER, TAKING CARE NOT TO DAMAGE ANY EXISTING REINFORCING STEEL. SANDBLAST EXPOSED REINFORCING AND FACES OF EXISTING CONCRETE THAT WILL CONTACT THE SHOTCRETE.

THERE SHALL BE A MINIMUM COVER OF 2 3/4" ON ALL EXPOSED REINFORCING STEEL (INCLUDING SHOTCRETE CONTAINING SILICA FUME).

LOCATIONS OF SHOTCRETE WILL BE DETERMINED IN FIELD BY THE ENGINEER.

APPROXIMATE LOCATIONS OF SHOTCRETE	
ABUTMENT A	
• Face of Backwall	14 SF
PIER 1	
• Deck Overhang, Span 1	6 SF
• Pier 1, Column #5	86 SF
PIER 2	
• Underside of Pier Cap	124 SF
• Pier 2, Columns #1 - #4	255 SF
PIER 3	
• Pier 3, Column #1	4 SF
PIER 4	
• Pier 4, Column #1	14 SF
ABUTMENT B	
• Face of Backwall	55 SF
TOTAL	558 SF

CONCRETE SUBSTRUCTURE SURFACE REPAIR APPROXIMATE LOCATIONS
(DOES NOT REQUIRE JACKING AND BLOCKING)

ABUTMENT A	
• Face of Breastwall & Wash Area	4 SY
PIER 1	
• Face of Cap	3 SY
PIER 2	
• Face of Cap	18 SY
• Top of Cap	4 SY
PIER 3	
• -	-
PIER 4	
• Face of Cap	11 SY
• Top of Cap	10 SY
ABUTMENT B	
• Face of Breastwall	4 SY
• Top of Footing	2 SY
TOTAL	56 SY

CONCRETE SUBSTRUCTURE SURFACE REPAIR APPROXIMATE LOCATIONS
(JACKING AND BLOCKING REQUIRED)

PIER 2	
• Span 2, Beam #8	3 SY
• Jacking & Blocking	1 EACH
PIER 4	
• Span 4 & 5, Beam #2	4 SY
• Jacking & Blocking	2 EACH
• Span 4, Beam #3	10 SY
• Jacking & Blocking	1 EACH
• Span 4, Beam #4	4 SY
• Jacking & Blocking	1 EACH
TOTAL (Repairs)	21 SY
TOTAL (Jacking & Blocking)	5 EACH

CONCRETE SUBSTRUCTURE SURFACE REPAIRS SHALL BE COMPLETED SIMILAR TO THE DETAIL SHOWN FOR SHOCRETE EXCEPT REPAIRS COMPLETED ON TOP OF CAP AND BEARING SEATS SHALL BE FINISHED TO THE ORIGINAL CONCRETE ELEVATION AND SHAPE.

CONCRETE SHALL BE USED TO COVER EXPOSED REINFORCING STEEL, AREAS WHERE REINFORCING STEEL IS CORRODED, AND OTHER AREAS OF CONCRETE DETERIORATION, AS DIRECTED BY THE ENGINEER.

ALL REPAIRS SHALL BE COMPLETED WITH CLASS A4 POST & RAIL CONCRETE.

REMOVE EXISTING CONCRETE TO SOUND CONCRETE AND IN AREAS OF CORRODED REINFORCING, AS DIRECTED BY THE ENGINEER, TAKING CARE NOT TO DAMAGE ANY EXISTING REINFORCING STEEL. SANDBLAST EXPOSED REINFORCING AND FACES OF EXISTING CONCRETE THAT WILL CONTACT THE SHOTCRETE.

ALL AREAS THAT NEW CONCRETE CONTACTS EXISTING CONCRETE SHALL BE BONDED WITH ARMATEC 110 BONDING EPOXY

THERE SHALL BE A MINIMUM COVER OF 2 3/4" ON ALL EXPOSED REINFORCING STEEL EXCEPT IN AREAS OTHERWISE STATED ABOVE.

LOCATIONS OF REPAIRS SHALL BE DETERMINED IN FIELD BY THE ENGINEER.

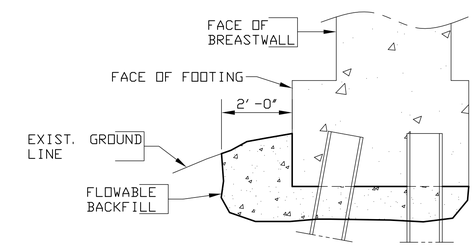

SECTION A/5/5
(REINFORCING STEEL NOT SHOWN)
NOT TO SCALE

NOTES: ABUTMENT B FILL HAS BEEN SETTLING OVER THE YEARS. CONTRACTOR SHALL CUT 5 - 2'X2' WINDOWS IN EXISTING GROUND IN FRONT OF THE FACE OF THE ABUTMENT B FOOTING, AS SHOWN IN THE PLAN VIEW OF THIS SHEET TO A DEPTH OF AT LEAST 6" BELOW BOTTOM OF THE EXISTING FOOTING. THE FLOWABLE FILL IS BEING PLACED TO FILL ANY VOIDS UNDER THE EXISTING FOOTING AND TO PROTECT THE EXISTING PILING FROM CORRODING.

CONTRACTOR SHALL START AT ONE END OF THE FOOTING FILLING THE VOID UNDER ABUTMENT FOOTING WITH VDOT APPROVED FLOWABLE FILL. ONCE YOU SEE THE FLOWABLE FILL IN THE ADJACENT WINDOW, FILL WINDOW UP TO EXISTING GROUND LINE AND MOVE TO THE ADJACENT WINDOW AND START FILLING THE VOID IN THE SECOND WINDOW. REPEAT THESE STEPS UNTIL THE VOID IS COMPLETELY FILLED UNDER THE ENTIRE LENGTH OF THE ABUTMENT B FOOTING.

ALL COSTS FOR THIS WORK SHALL BE INCLUDED IN LUMP SUM BID "FLOWABLE FILL REPAIR".

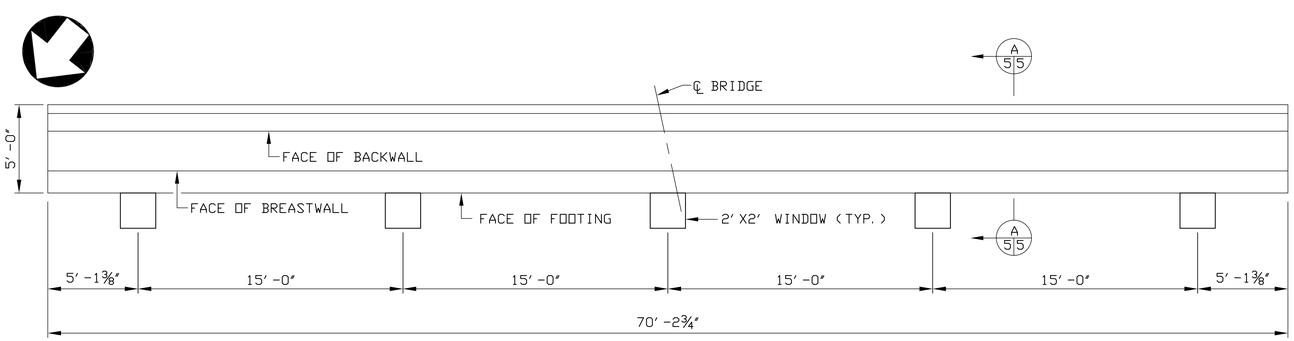

ABUTMENT B - PLAN
(REINFORCING STEEL & PILING NOT SHOWN)
NOT TO SCALE

COMMONWEALTH OF VIRGINIA
R.W. SCHWARTZ
Lic. No. 4291
10-5-21
PROFESSIONAL ENGINEER

SCHWARTZ & ASSOCIATES, INC.
CONSULTING ENGINEERS
7331 TIMBERLAKE ROAD
LYNCHBURG, VA.

MARTIN LUTHER KING JR. WAY OVER BLACKS RUN, N.S. RWY. & CHESAPEAKE AVE.
CITY OF HARRISONBURG, VA.
MISCELLANEOUS DETAILS

DESIGNED BY: RES	DRAWN BY: RES	CHECKED BY: RWS
SCALE: AS SHOWN	PLAN NO.:	
COMM. NO. 18028	DATE: OCTOBER 5, 2021	SHEET: 5 OF 12

CADD REFERENCE NO: 18028BRIDGE

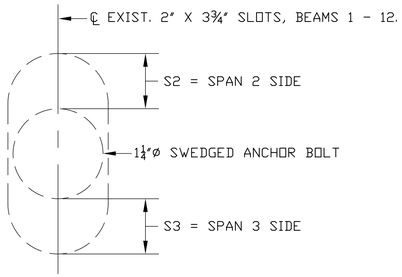

LEFT - MEANS ANCHOR BOLT ON LEFT SIDE OF CENTER LINE OF BEAM (LOOKING FROM ABUTMENT A TO B)

RIGHT - MEANS ANCHOR BOLT ON RIGHT SIDE OF CENTER LINE OF BEAM (LOOKING FROM ABUTMENT A TO B)

ANCHOR BOLT SLOT REFERENCE DETAIL (PIER 2, SPAN 2)

NOT TO SCALE

EXISTING ANCHOR BOLT SLOT CLEARANCES AT PIER 2, SPAN 2

(CLEARANCES SHOWN WERE TAKEN AT 57° F)

ANCHOR BOLT LOCATION	LEFT		RIGHT		COMMENTS
	S2	S3	S2	S3	
PIER 2 - BM #1	0"	2 7/16"	0"	3 1/8"	
PIER 2 - BM #2	1/4"	2 5/8"	0"	2 13/16"	
PIER 2 - BM #3	0"	2 3/8"	1/8"	2 1/4"	
PIER 2 - BM #4	0"	2 9/16"	0"	2 15/16"	
PIER 2 - BM #5	0"	2 3/16"	0"	2 1/8"	
PIER 2 - BM #6	0"	2 3/4"	0"	2 1/2"	
PIER 2 - BM #7	13/16"	1 3/4"	1/4"	2 1/8"	
PIER 2 - BM #8	1/4"	1 5/8"	0"	2 5/16"	
PIER 2 - BM #9	0"	2 1/4"	0"	2 1/16"	
PIER 2 - BM #10	1/2"	1 7/8"	0"	2 3/8"	
PIER 2 - BM #11	0"	2 3/8"	0"	2 5/8"	
PIER 2 - BM #12	0"	2 5/8"	0"	2 5/8"	

EXISTING SLOTS SHALL BE ENLARGED TO HAVE 7/8" CLEARANCE @ 60° F ON EACH SIDE OF THE ANCHOR BOLT TO ALLOW FOR CONTRACTION & EXPANSION. SLOTS SHALL BE ADJUSTED 1/16" FOR EACH 10° F VARIATION FROM 60° F AS DIRECTED BY THE ENGINEER.

SLOTS SHALL BE ENLARGED IN SUCH A MANNER NOT TO DAMAGE THE ANCHOR BOLTS AND BEARINGS. ANY DAMAGE CAUSED TO THE ANCHOR BOLTS OR BEARINGS SHALL BE CORRECTED BY THE CONTRACTOR AT HIS EXPENSE, AS DIRECTED BY THE ENGINEER.

CONTRACTOR SHALL FURNISH AND INSTALL MISSING WASHERS WITH NEW WASHERS TO MATCH EXISTING ONES.

EXPANSION SLOT ENLARGEMENT

(PIER 2, SPAN 2)

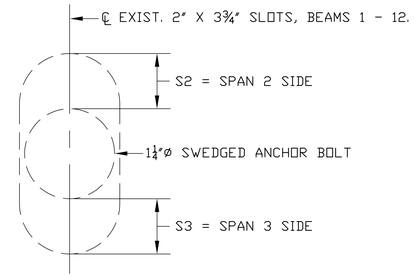

LEFT - MEANS ANCHOR BOLT ON LEFT SIDE OF CENTER LINE OF BEAM (LOOKING FROM ABUTMENT A TO B)

RIGHT - MEANS ANCHOR BOLT ON RIGHT SIDE OF CENTER LINE OF BEAM (LOOKING FROM ABUTMENT A TO B)

ANCHOR BOLT SLOT REFERENCE DETAIL (PIER 2, SPAN 3)

NOT TO SCALE

EXISTING ANCHOR BOLT SLOT CLEARANCES AT PIER 2, SPAN 3

(CLEARANCES SHOWN WERE TAKEN AT 57° F)

ANCHOR BOLT LOCATION	LEFT		RIGHT		COMMENTS
	S2	S3	S2	S3	
PIER 2 - BM #1	-	-	-	-	
PIER 2 - BM #2	-	-	-	-	⊕ - Top of Bolt broke Missing Nut & Washer
PIER 2 - BM #3	-	-	-	-	
PIER 2 - BM #4	-	-	5/8"	2"	
PIER 2 - BM #5	-	-	7/8"	1 3/8"	
PIER 2 - BM #6	*	*	⊕	⊕	* - Missing Anchor Bolt
PIER 2 - BM #7	1 7/8"	13/16"	⊕	⊕	
PIER 2 - BM #8	-	-	-	-	
PIER 2 - BM #9	-	-	-	-	
PIER 2 - BM #10	-	-	-	-	
PIER 2 - BM #11	-	-	-	-	
PIER 2 - BM #12	1 1/2"	3/4"	-	-	

EXISTING SLOTS SHALL BE ENLARGED TO HAVE 7/8" CLEARANCE @ 60° F ON EACH SIDE OF THE ANCHOR BOLT TO ALLOW FOR CONTRACTION & EXPANSION. SLOTS SHALL BE ADJUSTED 1/16" FOR EACH 10° F VARIATION FROM 60° F AS DIRECTED BY THE ENGINEER.

SLOTS SHALL BE ENLARGED IN SUCH A MANNER NOT TO DAMAGE THE ANCHOR BOLTS AND BEARINGS. ANY DAMAGE CAUSED TO THE ANCHOR BOLTS OR BEARINGS SHALL BE CORRECTED BY THE CONTRACTOR AT HIS EXPENSE, AS DIRECTED BY THE ENGINEER.

CONTRACTOR SHALL FURNISH AND INSTALL MISSING WASHERS WITH NEW WASHERS TO MATCH EXISTING ONES.

EXPANSION SLOT ENLARGEMENT

(PIER 2, SPAN 3)

COMMONWEALTH OF VIRGINIA
R.W. SCHWARTZ
Lic. No. 4291
10-5-21
PROFESSIONAL ENGINEER

SCHWARTZ & ASSOCIATES, INC.
CONSULTING ENGINEERS
7331 TIMBERLAKE ROAD
LYNCHBURG, VA.

MARTIN LUTHER KING JR. WAY OVER BLACKS RUN, N.S. RWY. & CHESAPEAKE AVE.
CITY OF HARRISONBURG, VA.
EXPANSION SLOT ENLARGEMENT

DESIGNED BY: RES	DRAWN BY: RES	CHECKED BY: RWS
SCALE: AS SHOWN		PLAN NO.:
COMM. NO. 18028	DATE: OCTOBER 5, 2021	SHEET: 6 OF 12

CADD REFERENCE NO. 18028BRIDGE

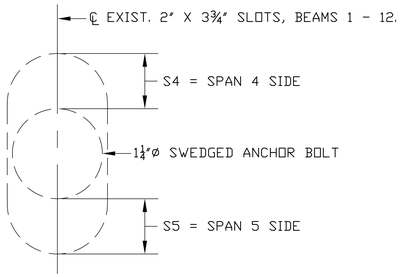

LEFT - MEANS ANCHOR BOLT ON LEFT SIDE OF CENTER LINE OF BEAM (LOOKING FROM ABUTMENT A TO B)

RIGHT - MEANS ANCHOR BOLT ON RIGHT SIDE OF CENTER LINE OF BEAM (LOOKING FROM ABUTMENT A TO B)

ANCHOR BOLT SLOT REFERENCE DETAIL (PIER 4, SPAN 4)

NOT TO SCALE

EXISTING ANCHOR BOLT SLOT CLEARANCES AT PIER 4, SPAN 4

(CLEARANCES SHOWN WERE TAKEN AT 82° F)

ANCHOR BOLT LOCATION	LEFT		RIGHT		COMMENTS
	S4	S5	S4	S5	
PIER 4 - BM #1	1 11/16"	13/16"	1 3/8"	1 1/16"	
PIER 4 - BM #2	-	-	-	-	
PIER 4 - BM #3	1 3/16"	1"	7/8"	1 3/8"	
PIER 4 - BM #4	-	-	7/8"	1 5/8"	
PIER 4 - BM #5	-	-	1/2"	1 1/2"	
PIER 4 - BM #6	15/16"	1 3/4"	1/2"	2"	
PIER 4 - BM #7	-	-	7/8"	1 3/4"	
PIER 4 - BM #8	-	-	-	-	
PIER 4 - BM #9	-	-	15/16"	1 3/8"	
PIER 4 - BM #10	-	-	-	-	
PIER 4 - BM #11	1 11/16"	7/8"	-	-	
PIER 4 - BM #12	-	-	-	-	

EXISTING SLOTS SHALL BE ENLARGED TO HAVE 7/8" CLEARANCE @ 60° F ON EACH SIDE OF THE ANCHOR BOLT TO ALLOW FOR CONTRACTION & EXPANSION. SLOTS SHALL BE ADJUSTED 1/16" FOR EACH 10° F VARIATION FROM 60° F AS DIRECTED BY THE ENGINEER.

SLOTS SHALL BE ENLARGED IN SUCH A MANNER NOT TO DAMAGE THE ANCHOR BOLTS AND BEARINGS. ANY DAMAGE CAUSED TO THE ANCHOR BOLTS OR BEARINGS SHALL BE CORRECTED BY THE CONTRACTOR AT HIS EXPENSE, AS DIRECTED BY THE ENGINEER.

CONTRACTOR SHALL FURNISH AND INSTALL MISSING WASHERS WITH NEW WASHERS TO MATCH EXISTING ONES.

EXPANSION SLOT ENLARGEMENT

(PIER 4, SPAN 4)

COMMONWEALTH OF VIRGINIA
R.W. SCHWARTZ
Lic. No. 4291
10-5-21
PROFESSIONAL ENGINEER

SCHWARTZ & ASSOCIATES, INC.
CONSULTING ENGINEERS
7331 TIMBERLAKE ROAD
LYNCHBURG, VA.

MARTIN LUTHER KING JR. WAY OVER BLACKS RUN, N.S. RWY. & CHESAPEAKE AVE.
CITY OF HARRISONBURG, VA.
EXP. SLOT ENLARGEMENT CONT.

DESIGNED BY: RES	DRAWN BY: RES	CHECKED BY: RWS
SCALE: AS SHOWN		PLAN NO.:
COMM. NO. 18028	DATE: OCTOBER 5, 2021	SHEET: 7 OF 12

CADD REFERENCE NO.: 18028BRIDGE

▲ – TO BE REMOVED

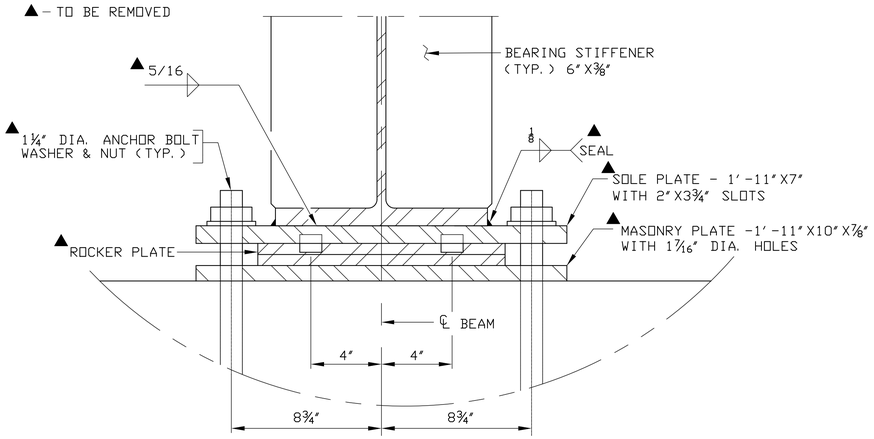

EXISTING BEARING ASSEMBLY

NOT TO SCALE

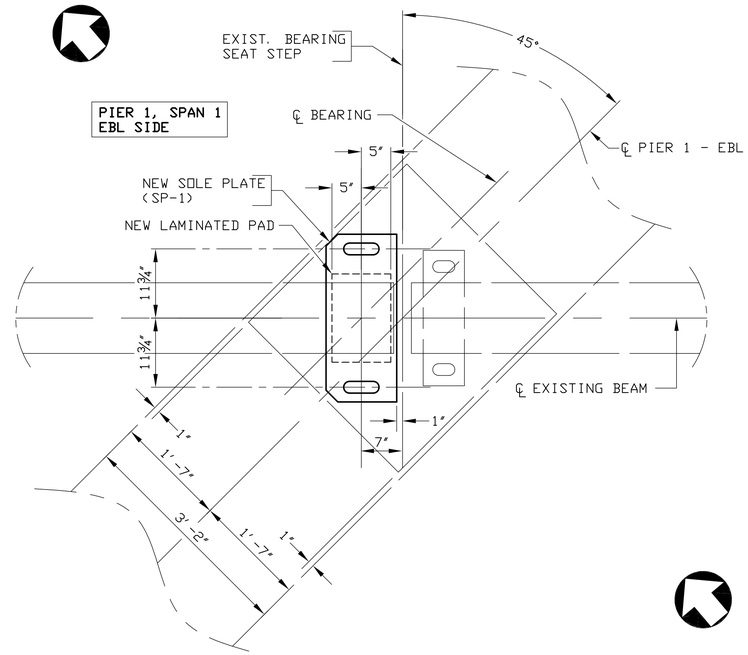

BEARING LAYOUT - PIER 1 EBL

NOT TO SCALE

✳ – CONTRACTOR SHALL REMOVE CONCRETE TO TOP OF EXISTING REINFORCING STEEL TO EXPOSE TOP OF LONGITUDINAL BARS (2"X6"SLOT). CONTRACTOR SHALL LOCATE NEW ANCHOR BOLT HOLE BETWEEN REINFORCING STEEL PRIOR TO DRILLING HOLE. DRILLED HOLE SHALL BE BLOWN CLEAN, ANCHOR BOLTS INSTALLED AND ANCHOR MATERIAL SHALL BE KELI-GROUT. CONTRACTOR SHALL SAND BLAST EXISTING CONCRETE SLOT, PRE-WET CONCRETE FOR 2 HOURS MIN. AND FILL REPAIR AREA WITH SIKATOP 111 PLUS, AS DIRECTED BY THE ENGINEER UP TO ORIGINAL CONCRETE GRADE.

✳✳ – CONTRACTOR SHALL REMOVE CONCRETE AROUND EXIST. ANCHOR BOLTS TO A DEPTH OF 2" MIN., CUT OFF EXIST. ANCHOR BOLT, SAND BLAST EXISTING CONCRETE, PRE-WET CONCRETE FOR 2 HOURS MIN. AND FILL IN HOLE WITH SIKATOP 111 PLUS, AS DIRECTED BY THE MANUFACTURER UP TO ORIGINAL CONCRETE GRADE.

● – CONTRACTOR SHALL PREPARE BOTTOM OF NEW SOLE PLATES (AFTER ALL WELDING HAS BEEN COMPLETED) THAT WILL CONTACT LAMINATED ELASTOMERIC BEARING PADS WITH A GRIT, PER VDOT SPECIFICATIONS, SECTION 408.

■ – CONTRACTOR SHALL PREPARE TOP OF EXISTING CONCRETE SEAT THAT WILL CONTACT BOTTOM OF LAMINATED ELASTOMERIC BEARING PAD IN ACCORDANCE WITH VDOT SPECIFICATIONS, SECTION 408.

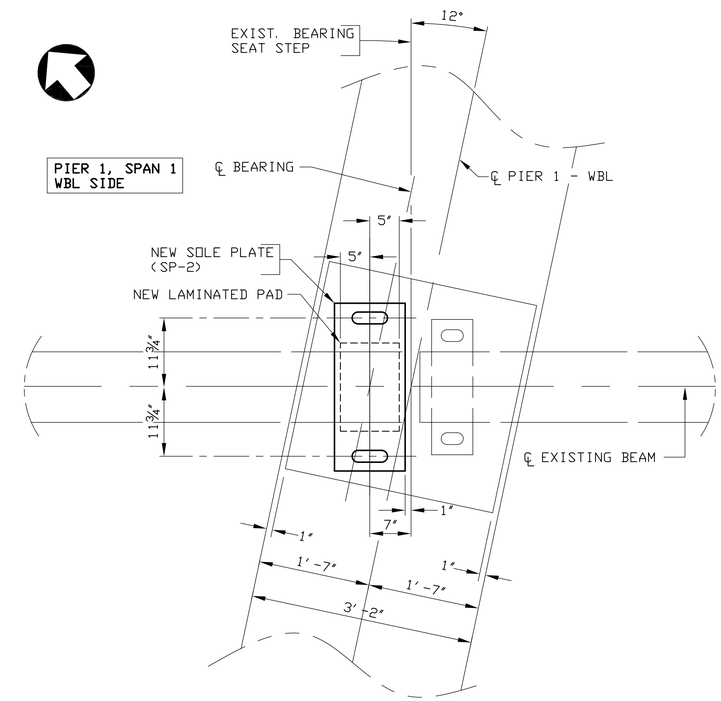

BEARING LAYOUT - PIER 1 WBL

NOT TO SCALE

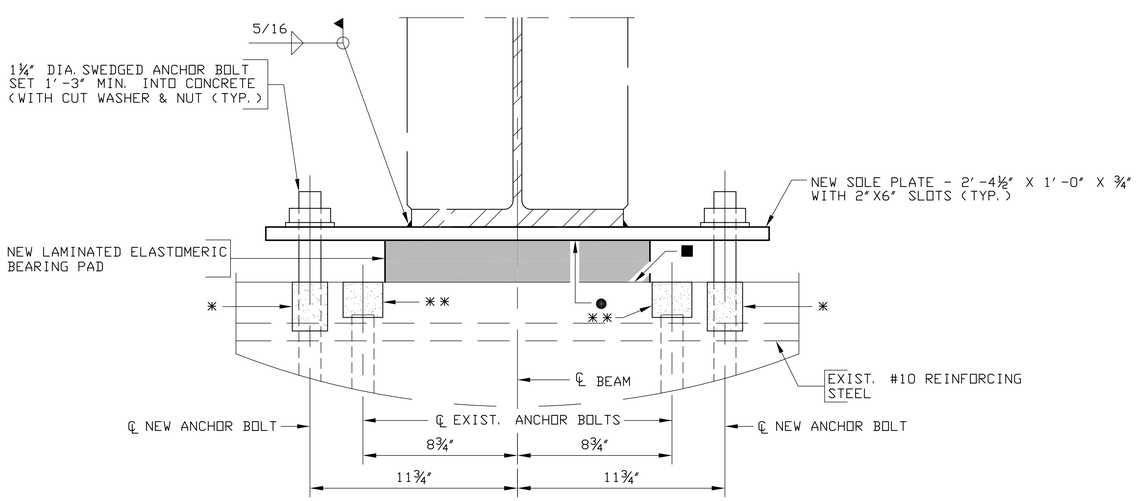

NEW BEARING ASSEMBLY

NOT TO SCALE

COMMONWEALTH OF VIRGINIA
R.W. SCHWARTZ
Lic. No. 4291
10-5-21
PROFESSIONAL ENGINEER

COMM. NO. 18028

SCHWARTZ & ASSOCIATES, INC.
CONSULTING ENGINEERS
7331 TIMBERLAKE ROAD
LYNCHBURG, VA.

MARTIN LUTHER KING JR. WAY OVER BLACKS RUN, N.S. RWY. & CHESAPEAKE AVE.
CITY OF HARRISONBURG, VA.
BEARING REPLACEMENT

DESIGNED BY: RES	DRAWN BY: RES	CHECKED BY: RWS
SCALE: AS SHOWN	PLAN NO.:	
DATE: OCTOBER 5, 2021	SHEET: 8 OF 12	

CADD REFERENCE NO.: 18028BRIDGE

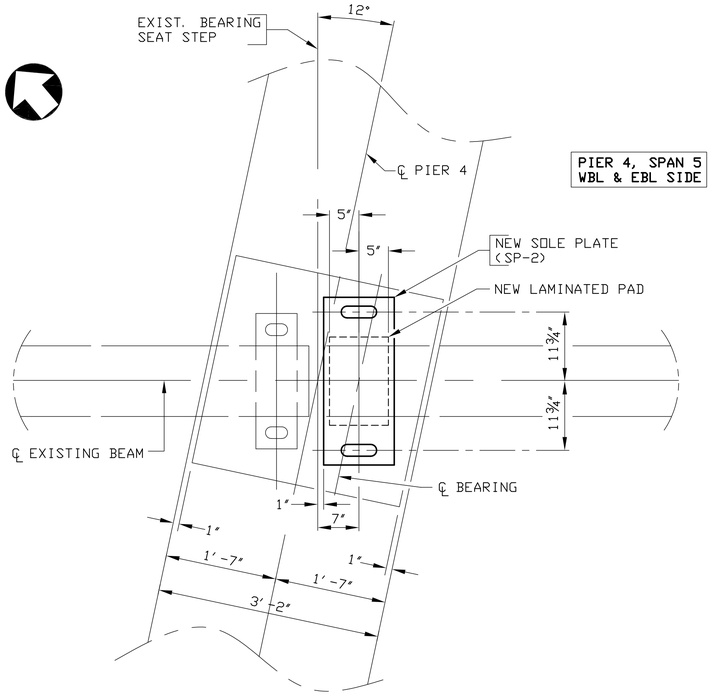

BEARING LAYOUT - PIER 4 WBL & EBL

NOT TO SCALE

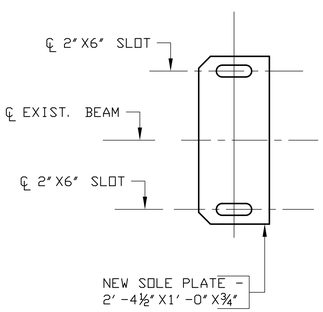

SOLE PLATE - SP-1

(6 REQUIRED)
NOT TO SCALE

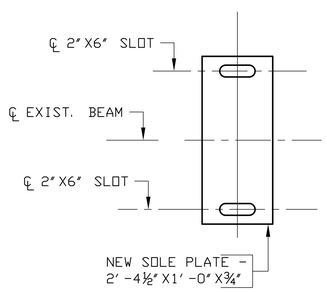

SOLE PLATE - SP-2

(18 REQUIRED)
NOT TO SCALE

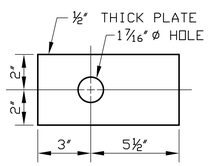

WASHER

(48 REQUIRED)
NOT TO SCALE

NEW ANCHOR BOLT PLACEMENT NOTES

MATERIALS:

1¼"ø SWEDGED ANCHOR BOLTS, NUTS & WASHERS SHALL BE IN ACCORDANCE WITH THE VDOT ROAD & BRIDGE SPECIFICATIONS, 2020 AND CURRENT REVISIONS.

NEW ⅞"ø H.S. END STRUT BOLTS (8 - BOLTS PER CONNECTION), HEAVY HEX HEAD NUTS AND HARDENED WASHERS SHALL BE IN ACCORDANCE WITH THE VDOT ROAD & BRIDGE SPECIFICATIONS AND CURRENT REVISIONS. LENGTH OF BOLTS SHALL BE DETERMINED IN THE FIELD BY THE CONTRACTOR.

PROCEDURE:

CONTRACTOR SHALL LAYOUT NEW ANCHOR BOLT LOCATION AND SEE IF THE END STRUT NEEDS TO BE REMOVED IN ORDER TO CORE DRILL NEW ANCHOR BOLT HOLE.

CONTRACTOR SHALL REMOVE BOLTS, WASHERS, NUTS & END STRUT, IF IN THE WAY OF DRILLING OPERATION.

CONTRACTOR SHALL TRIM OFF AND REMOVE PORTION OF EXISTING SOLE AND MASONRY PLATE BACK TO THE EXISTING ANCHOR BOLT SLOTS TO ALLOW ACCESS FOR DRILLING NEW ANCHOR BOLT HOLES.

CONTRACTOR SHALL REMOVE CONCRETE (2"X6" MIN. SLOT) TO TOP OF EXISTING LONGITUDINAL REINFORCING STEEL AND LOCATE ANCHOR BOLT HOLE BETWEEN BARS AS NOT TO DAMAGE EXIST. LONGITUDINAL BARS. ANY DAMAGE DONE TO EXISTING LONGITUDINAL BARS SHALL BE REPAIRED AS DIRECTED BY THE ENGINEER, AT THE CONTRACTORS FULL EXPENSE.

CONTRACTOR SHALL DRILL 1⅜"ø HOLE IN SLOT FOR ANCHOR BOLTS.

CONTRACTOR SHALL RE-INSTALL END STRUTS WITH NEW BOLTS, NUTS & WASHERS AND TORQUE THEM TO THE REQUIRED TORQUE.

AFTER BEARING REPLACEMENT HAS BEEN COMPLETED AND JACK & BLOCKING HAVE BEEN REMOVED, CONTRACTOR SHALL CLEAN OUT ANCHOR BOLT HOLE, GROUT AND INSTALL ANCHOR BOLTS MAKING SURE THERE IS ⅞" MINIMUM CLEARANCE IN SLOT ON EACH SIDE OF ANCHOR BOLT.

AFTER GROUT AROUND NEW ANCHOR BOLT HAS CURED, CONTRACTOR SHALL SAND BLAST CONCRETE SLOTS AROUND NEW AND EXISTING ANCHOR BOLTS, CLEAN OUT SLOTS, PRE-WET CONCRETE FOR 2 HOURS MIN. AND FILL IN SLOTS WITH SIKATOP 111 PLUS TO ORIGINAL CONCRETE FINISH GRADE.

INSTALL NEW WASHER AND ANCHOR BOLT NUT (NUT SHALL BE HAND TIGHTENED).

BEARING PLACEMENT NOTES

MATERIALS:

2'-4½" X 1'-0" X ¾" SOLE PLATES SHALL BE IN ACCORDANCE WITH THE VDOT ROAD & BRIDGE SPECIFICATIONS, 2016 AND CURRENT REVISIONS, SECTION 408.

LAMINATED ELASTOMERIC BEARING PADS SHALL BE IN ACCORDANCE WITH THE VDOT ROAD & BRIDGE SPECIFICATIONS, 2016 AND CURRENT REVISIONS, SECTION 408.

PAINTING AND CLEANING OF BEARINGS SHALL BE IN ACCORDANCE WITH THE VDOT ROAD & BRIDGE SPECIFICATIONS, 2016 AND CURRENT REVISIONS. PAINT SYSTEM USED SHALL BE THE SAME PAINT SYSTEM AND MANUFACTURER AS BEING USED FOR PAINTING OF STRUCTURAL STEEL ON THIS PROJECT.

SLOTS IN SOLE PLATES SHALL HAVE A ⅞" MINIMUM CLEARANCE @ 60° F ON EACH SIDE OF THE ANCHOR BOLT TO ALLOW FOR CONTRACTION AND EXPANSION.

PROCEDURE:

CONTRACTOR SHALL INSTALL JACKING AND BLOCKING. REMOVE EXISTING ANCHOR BOLT NUTS & WASHERS, JACK & BLOCK BEAMS, ¼" MAX. (NO LIVE LOAD SHALL BE ALLOWED OVER BEAMS THAT ARE BEING JACKED).

CONTRACTOR SHALL REMOVE EXISTING WELDS BETWEEN EXISTING SOLE PLATE AND BOTTOM FLANGE OF EXISTING BEAM BEING EXTREMELY CAREFUL NOT TO DAMAGE BOTTOM FLANGE OF BEAM. ANY DAMAGE DONE TO BOTTOM BEAM FLANGE SHALL BE REPAIRED BY THE CONTRACTOR, AS DIRECTED BY THE ENGINEER AT THE CONTRACTORS FULL EXPENSE.

REMOVE EXISTING SOLE PLATE, ROCKER PLATES AND MASONRY PLATE. CLEAN BOTTOM FLANGE OF BEAM THAT WAS IN CONTACT WITH SOLE PLATE AND PAINT.

REMOVE CONCRETE AROUND EXISTING ANCHOR BOLT TO A DEPTH OF 2" MIN., CUT OFF EXISTING ANCHOR BOLT, PREPARE CONCRETE SURFACE AND FILL IN HOLE WITH SIKATOP 111 PLUS UP TO ORIGINAL CONCRETE GRADE.

WELD NEW SOLE PLATE TO EXISTING BEAM BOTTOM FLANGE. REPAIR AND REPAINT DAMAGED PAINT SYSTEM AREA THAT RESULTS FROM WELDING OPERATION.

PREPARE CONCRETE AND UNDERSIDE OF NEW SOLE PLATE SURFACES THAT WILL CONTACT LAMINATED ELASTOMERIC BEARING PAD. ADD EPOXY AND SILICON CARBIDE OR ALUMINUM OXIDE TO SOLE PLATE UNDERSIDE (IN ACCORDANCE WITH VDOT ROAD AND BRIDGE SPECIFICATIONS, 2016 AND CURRENT REVISIONS, SECTION 408) AND ALLOW EPOXY TO FULLY CURE.

INSTALL NEW ELASTOMERIC BEARING PAD.

LET BEAM DOWN, REMOVE JACKS & BLOCKING.

ALL WELDING AND REMOVAL OF EXISTING WELDS SHALL BE PERFORMED BY A CERTIFIED WELDER THAT IS CERTIFIED FOR THIS TYPE AND POSITION OF REQUIRED WORK.

JACKING AND BLOCKING NOTES FOR BEARING REPLACEMENT

CONTRACTOR SHALL FURNISH JACKS (MIN. 75 TONS) THAT HAVE LOCK NUTS ON THEM THAT ALLOW JACKS TO BE LOCKED IN PLACE.

WORK SHALL BE PERFORMED IN THE FOLLOWING SEQUENCE:

1. REMOVE EXISTING ANCHOR BOLT NUTS AND WASHERS.
2. JACK AND BLOCK BEAMS, NO BEAMS SHALL BE JACKED UNDER LIVE LOAD. ALL JACKING AND BLOCKING OPERATIONS SHALL TAKE PLACE IN EACH ROADWAY (WBL OR EBL), AS DIRECTED BY THE ENGINEER. PRIOR TO BEGINNING ANY JACKING AND BLOCKING OPERATIONS, THE CONTRACTOR SHALL SUBMIT TO THE ENGINEER A JACKING AND BLOCKING PLAN, STAMPED BY A VIRGINIA LICENSED PROFESSIONAL ENGINEER, FOR APPROVAL. ALL WBL ROADWAY BEAMS (BEAMS 1 - 6) SHALL BE JACKED IN UNISON. ALL EBL BEAMS (BEAMS 7 - 12) SHALL BE JACKED IN UNISON.
3. BEAMS SHALL BE JACKED A SUFFICIENT DISTANCE (¼" MAX. OR AS DIRECTED BY THE ENGINEER) TO REMOVE EXISTING BEARING ASSEMBLY AND INSTALL NEW SOLE PLATES AND LAMINATED BEARING PADS. ANY DAMAGE DONE TO THE BOTTOM OF THE EXISTING BEAM FLANGE SHALL BE CORRECTED AT THE CONTRACTORS EXPENSE, AS DIRECTED BY THE ENGINEER.
4. LET JACKS DOWN & REMOVE JACKING AND BLOCKING. COMPLETE ANCHOR BOLT INSTALLATION.

ALL WELDING AND REMOVAL OF EXISTING WELDS SHALL BE PERFORMED BY A CERTIFIED WELDER THAT IS CERTIFIED FOR THIS TYPE AND POSITION OF REQUIRED WORK.

SLOTS SHALL BE ENLARGED IN SUCH A MANNER NOT TO DAMAGE THE ANCHOR BOLTS AND BEARINGS. ANY DAMAGE CAUSED TO THE ANCHOR BOLTS OR BEARINGS SHALL BE CORRECTED BY THE CONTRACTOR AT HIS EXPENSE, AS DIRECTED BY THE ENGINEER.

ALL BEARINGS SHALL BE CLEANED AND PAINTED USING THE SAME PAINT SYSTEM AS CALLED FOR ON THE OTHER STRUCTURAL STEEL.

CONTRACTOR MAY STOP TRAFFIC 10 MINUTE MAXIMUM WITH THE EXCEPTION OF EMERGENCY VEHICLES DURING WBL OR EBL JACKING OPERATIONS.

JACKING AND BLOCKING NOTES FOR CONCRETE SUBSTRUCTURE SURFACE REPAIR

CONTRACTOR SHALL FURNISH JACKS THAT HAVE LOCK NUTS ON THEM THAT ALLOW JACKS TO BE LOCKED IN PLACE.

WORK SHALL BE PERFORMED IN THE FOLLOWING SEQUENCE:

1. REMOVE EXISTING ANCHOR BOLT NUTS AND WASHERS. LOOSEN ANCHOR BOLT NUTS ON ADJACENT BEAMS THAT ARE BESIDE BEAM BEARING JACKED AND BLOCKED.
2. JACK AND BLOCK BEAMS, NO BEAMS SHALL BE JACKED UNDER LIVE LOAD OR HAVE LIVE LOAD ON THEM WHILE BEAM IS ON JACKING & BLOCKING. THE CONTRACTOR SHALL SUBMIT TO THE ENGINEER A JACKING AND BLOCKING PLAN, STAMPED BY A VIRGINIA LICENSED PROFESSIONAL ENGINEER, FOR APPROVAL.
3. BEAMS SHALL BE JACKED A SUFFICIENT DISTANCE (¼" MAX. OR AS DIRECTED BY THE ENGINEER) TO PERFORM CONCRETE SUBSTRUCTURE SURFACE REPAIR IN AREAS THAT REPAIRS EXTEND UNDER EXISTING BEARINGS.
4. CONCRETE SHALL HAVE 85% DESIGN STRENGTH BEFORE BEAMS CAN BE LET DOWN ON CONCRETE. CONCRETE SHALL OBTAIN 100% DESIGN STRENGTH BEFORE LIVE TRAFFIC LOAD BE APPLIED.
5. LET JACKS DOWN & REMOVE JACKING AND BLOCKING. RE-INSTALL ANCHOR BOLT NUTS, WASHERS AND HAND TIGHTEN ADJACENT ANCHOR BOLT NUTS.

ALL BEARINGS SHALL BE CLEANED AND PAINTED USING THE SAME PAINT SYSTEM AS CALLED FOR ON THE OTHER STRUCTURAL STEEL.

COMMONWEALTH OF VIRGINIA
R.W. SCHWARTZ
Lic. No. 4291
10-5-21
PROFESSIONAL ENGINEER

SCHWARTZ & ASSOCIATES, INC.
CONSULTING ENGINEERS
7331 TIMBERLAKE ROAD
LYNCHBURG, VA.

MARTIN LUTHER KING JR. WAY OVER BLACKS RUN, N.S. RWY. & CHESAPEAKE AVE. CITY OF HARRISONBURG, VA. BEARING REPLACEMENT CONT., & NOTES

DESIGNED BY: RES	DRAWN BY: RES	CHECKED BY: RWS
SCALE: AS SHOWN	PLAN NO.:	
COMM. NO. 18028	DATE: OCTOBER 5, 2021	SHEET: 9 OF 12

CADD REFERENCE NO.: 18028BRIDGE

STATE	FEDERAL AID ROUTE	FEDERAL AID PROJECT	STATE ROUTE	STATE PROJECT	SHEET NO.
VA.	—				10

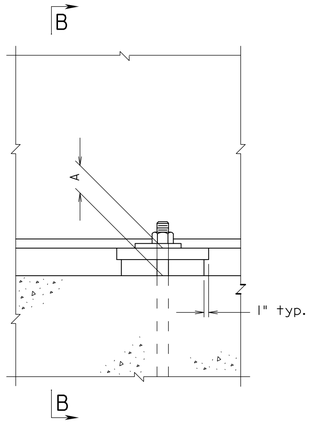

ELEVATION
EXPANSION ASSEMBLY

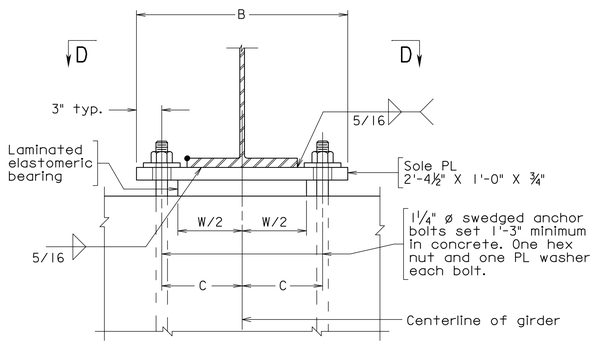

SECTION B-B

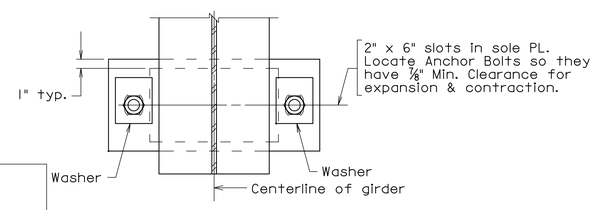

SECTION D-D

Notes:

Material: Elastomer - 50 durometer hardness.
Shim - ASTM A36 or A1011 mild steel.
Standard steel pipe - ASTM A53 Grade B.

Bevel sole plates to grade shown. Minimum sole plate thickness is ¾". Plates shall not be painted on the surface in contact with the elastomeric bearing.

Elastomeric bearings shall be molded as a single unit.

Centerline of girder (including center line and text) shall be marked on the top, bottom and side surfaces of the laminated elastomeric bearing prior to shipping. The markings shall be done with an indelible ink or flexible paint of contrasting color.

See sheet 9 for washer details.

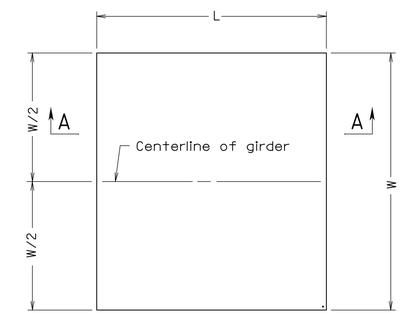

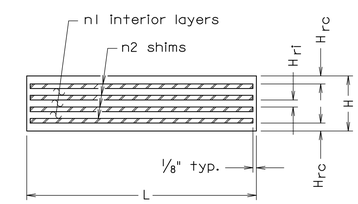

SECTION A-A
LAMINATED ELASTOMERIC BEARING

Span	Abut.	Pier	Beam	Bearing type	A	C	Laminated Elastomeric Bearing W	L	H	H_{rc}	n1 @ H_{ri}	n2 @ H_s	Grade %	Total Load (kips)
1	-	1	1 & 12	exp	3.5980	11 3/4"	15	10	2.5980	¼"	4 @ 0.375	5 @ 0.1196	7.0%	130.6
1	-	1	2 - 11	exp	3.5980	11 3/4"	15	10	2.5980	¼"	4 @ 0.375	5 @ 0.1196	7.0%	131.2
5	-	4	1 & 12	exp	3.5980	11 3/4"	15	10	2.5980	¼"	4 @ 0.375	5 @ 0.1196	0.27%	130.6
5	-	4	2 - 11	exp	3.5980	11 3/4"	15	10	2.5980	¼"	4 @ 0.375	5 @ 0.1196	0.88%	131.2

All dimensions in table are in inches.

Not to scale

©2018, Commonwealth of Virginia

02-5-2019

BBD-9 MOD.

COMMONWEALTH OF VIRGINIA
R.W. SCHWARTZ
Lic. No. 4291
10-5-21
PROFESSIONAL ENGINEER

Schwartz & Assoc.
Lynchburg, VA.

MARTIN LUTHER KING JR. WAY OVER
BLACKS RUN, N.S. RWY. & CHESAPEAKE AVE.
CITY OF HARRISONBURG, VA.

No.	Description	Date
	Revisions	

COMMONWEALTH OF VIRGINIA
DEPARTMENT OF TRANSPORTATION

STRUCTURE AND BRIDGE DIVISION

BEARING DETAILS

Designed: MBH
Drawn: MBH
Checked: RWS

Date	Plan No.	Sheet No.
OCT. 5, 2021	BBD-9	10 of 12

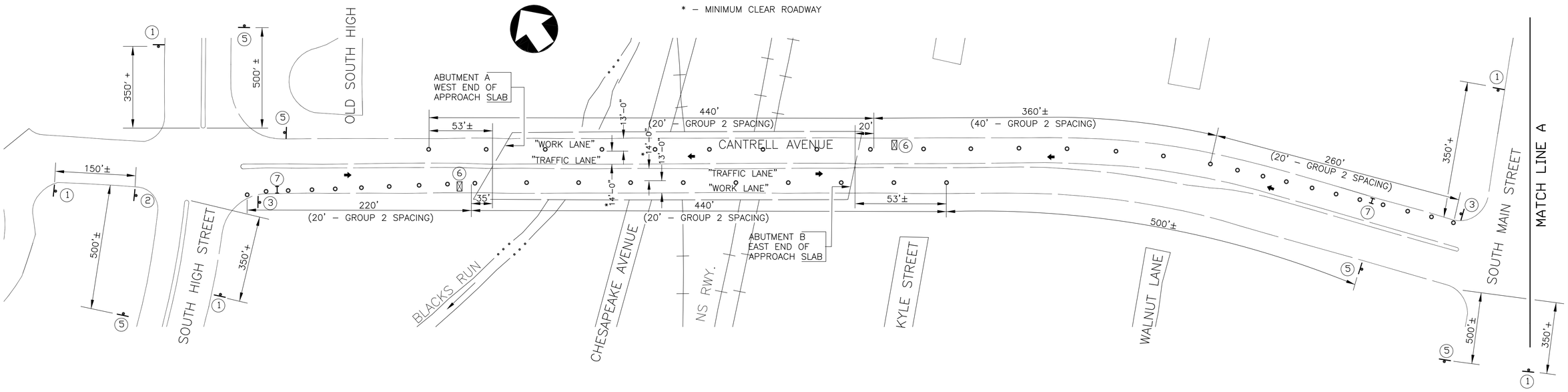

NOTES FOR TRAFFIC CONTROL

1. SIGN SPACINGS SHALL BE ADJUSTED TO FIT FIELD CONDITIONS, AS DIRECTED BY THE ENGINEER.
2. ALL SIGNS, DRUMS, TYPE III BARRICADES, AND ANY OTHER DEVICES USED IN CONSTRUCTION ZONES SHALL BE KEPT CLEAN AND PROPERLY ALIGNED AT ALL TIMES.
3. ALL SIGNS THAT GOVERN TRAFFIC FLOW THROUGH A CONSTRUCTION ZONE SHALL BE COVERED OR REMOVED AND STORED AWAY FROM TRAFFIC WHEN NOT IN USE.
4. CONTRACTOR SHALL TEMPORARILY COVER ANY EXISTING SIGNS WHO'S MESSAGE CONTRADICTS TEMPORARY CONSTRUCTION SIGNS DURING CONSTRUCTION & UNCOVER THEM AT THE COMPLETION OF THE PROJECT, AS DIRECTED BY THE ENGINEER.
5. ALL SIGNS SHALL BE FIELD LOCATED AS DIRECTED BY THE ENGINEER.
6. ALL SIGNAGE SHALL BE DIAMOND GRADE (FLUORESCENT PRISMATIC LENS SHEETING).
7. A TRUCK MOUNTED ATTENUATOR (TMA) SHALL BE USED ON THIS PROJECT IF TOOLS OR EQUIPMENT ARE LEFT IN THE LANE CLOSER DURING NON-WORKING HOURS.
8. PRIOR TO ANY GROUND DISTURBANCE ACTIVITIES, THE CONTRACTOR SHALL CONTACT MISS UTILITY.
9. THE CONTRACTOR SHALL WORK AROUND ALL OVERHEAD UTILITIES ON THIS PROJECT.
10. ALL CONSTRUCTION SIGNING SHALL BE FABRICATED AND INSTALLED IN ACCORDANCE WITH THE 2011 VIRGINIA WORK AREA PROTECTION MANUAL & LATEST REVISIONS, THE 2009 MUTCD, THE VIRGINIA SUPPLEMENT TO THE MUTCD, THE STANDARD HIGHWAY SIGN MANUAL, THE 2020 VIRGINIA ROAD AND BRIDGE SPECIFICATIONS AND THE 2016 VIRGINIA ROAD AND BRIDGE STANDARDS.
11. CONTRACTOR SHALL MAINTAIN ONE SIDEWALK OPEN TO PEDESTRIAN TRAFFIC AT ALL TIMES. CONTRACTOR SHALL USE "SIDEWALK CLOSED" – R9-9 SIGNS ON EACH END OF THE BRIDGE IN THE AREA WERE SIDEWALK IS CLOSED ALONG WITH ORANGE CONSTRUCTION FENCING. ALL COSTS SHALL BE INCLUDED IN "MAINTENANCE OF TRAFFIC".

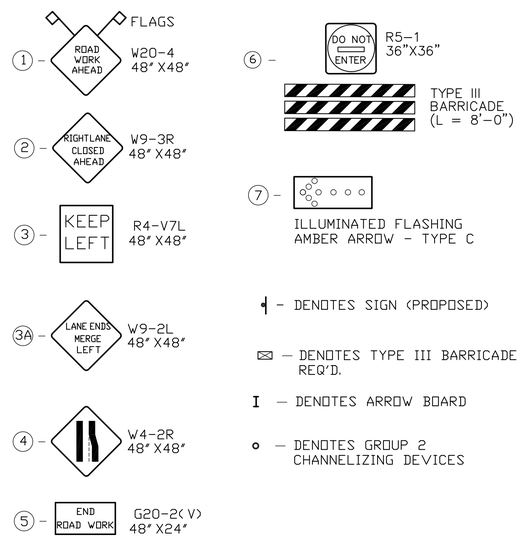

NOTE: ALL SIGN SIZES SHALL BE IN ACCORDANCE WITH CURRENT EDITION OF THE VA. WORK AREA PROTECTION MANUAL & M.U.T.C.D MANUAL.

CONTRACTOR SHALL FURNISH ALL SIGNS, DRUMS, LIGHTS VERTICAL PANELS & AMBER ARROWS, ETC. IN ACCORDANCE WITH WITH CURRENT EDITION OF THE VA. WORK AREA PROTECTION MANUAL.

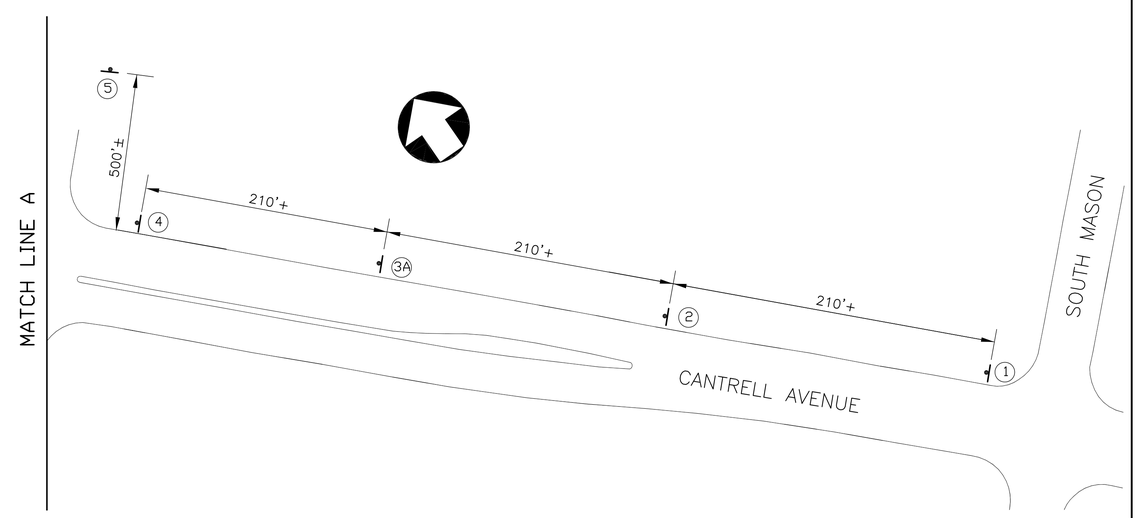

COMMONWEALTH OF VIRGINIA
R.W. SCHWARTZ
Lic. No. 4291
10-5-21
PROFESSIONAL ENGINEER

SCHWARTZ & ASSOCIATES, INC.
CONSULTING ENGINEERS
7331 TIMBERLAKE ROAD
LYNCHBURG, VA.

MARTIN LUTHER KING JR. WAY OVER BLACKS RUN, N.S. RWY. & CHESAPEAKE AVE. CITY OF HARRISONBURG TRAFFIC CONTOL LAYOUT – OUTSIDE LANE CLOSURE

DESIGNED BY: RES	DRAWN BY: RES	CHECKED BY: RWS
SCALE: AS SHOWN	PLAN NO.:	
COMM. NO. 18028	DATE: OCTOBER 5, 2021	SHEET: 11 OF 12

CADD REFERENCE NO: 18028TCOUTSIDECLOSURE

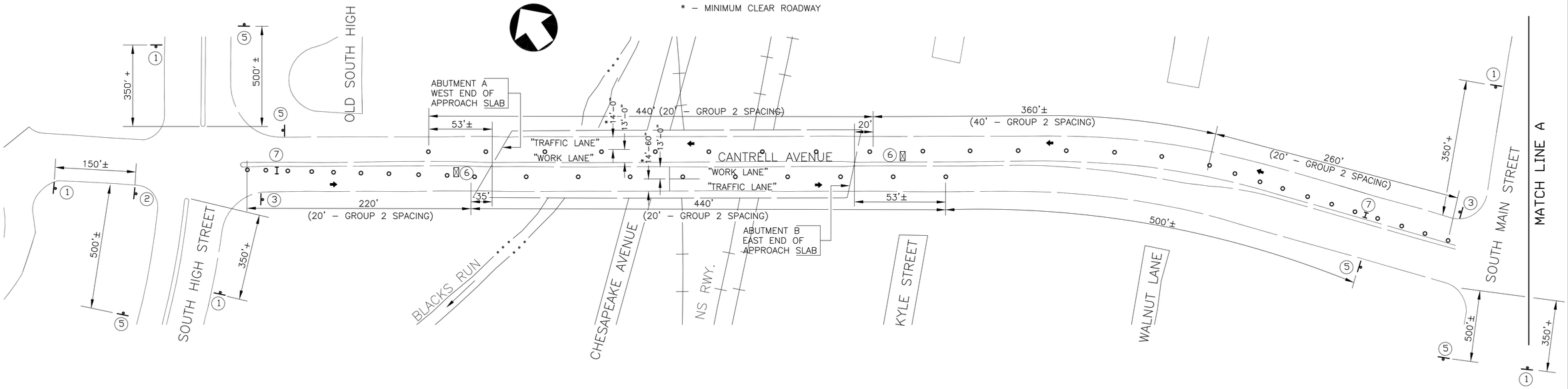

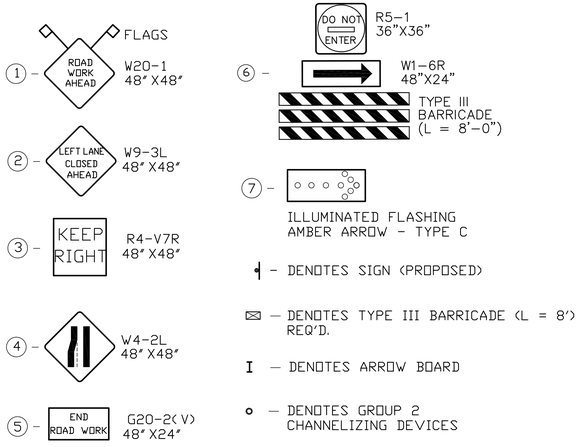

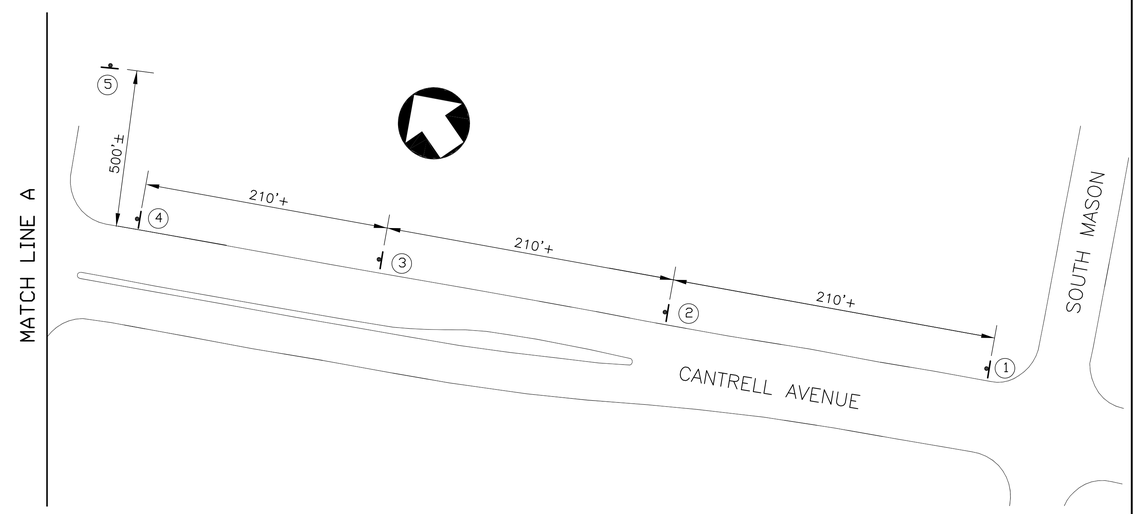

NOTE: ALL SIGN SIZES SHALL BE IN ACCORDANCE WITH CURRENT EDITION OF THE VA. WORK AREA PROTECTION MANUAL & M.U.T.C.D MANUAL.

CONTRACTOR SHALL FURNISH ALL SIGNS, DRUMS, LIGHTS VERTICAL PANELS & AMBER ARROWS, ETC. IN ACCORDANCE WITH WITH CURRENT EDITION OF THE VA. WORK AREA PROTECTION MANUAL.

SEE SHEET 11 FOR TRAFFIC CONTROL NOTES.

COMMONWEALTH OF VIRGINIA
R.W. SCHWARTZ
Lic. No. 4291
10-5-21
PROFESSIONAL ENGINEER

SCHWARTZ & ASSOCIATES, INC.
CONSULTING ENGINEERS
7331 TIMBERLAKE ROAD
LYNCHBURG, VA.

MARTIN LUTHER KING JR. WAY OVER BLACKS RUN, N.S. RWY. & CHESAPEAKE AVE.
CITY OF HARRISONBURG
TRAFFIC CONTROL LAYOUT - INSIDE LANE CLOSURE

DESIGNED BY: RES	DRAWN BY: RES	CHECKED BY: RWS
SCALE: AS SHOWN		PLAN NO.:
COMM. NO. 18028	DATE: OCTOBER 5, 2021	SHEET: 12 OF 12

CADD REFERENCE NO: 14082TCINSIDECLOSURE