ADDENDUM #1
ITB/RFP NUMBER: 2022015-PW-B
Proposed Bridge Substructure Repair for Martin Luther King, Jr. Way over Blacks Run, NS Railway & Chesapeake Ave.

DATE: February 7, 2022

TO: All Potential Bidders/Offerors

City of Harrisonburg's ITB, is modified as follows:

On February 2, 22 at 2:00pm local time a mandatory pre-bid meeting was held for the above-referenced solicitation. Attached and made part of this addendum is the sign-in sheet from this meeting, meeting minutes, and Cantrell Ave. original drawings.

All other requirements, terms and conditions of the ITB/RFP remain unchanged.

Addendum page must be signed and returned with your bid/proposal to acknowledge receipt of this addendum.

_____
Authorized Signature

By: Shane B. Smith
Procurement Manager

NAME (Please Print)	COMPANY	PHONE	EMAIL
Jacob Truxell	Fairfield Echols, LLC	540-337-1201	JTruxell@fairfieldechols.com
Brent Bowles	Lanford Brothers	540-992-2140	bbowles@lanfordbros.com
Marcus H von der Hofen	Coastal Gunite Constr. Co.	410-463-5673	marcus@coastalgunite.com
Daniel Runion Phillip Burleigh	Burleigh Construction	434-993-2214	drunion@burleighconstruction.com mpburleigh@burleighconstruction.com
Randy Saunders	Schwartz & Assoc.	434-237-6584	rsaunders@schwartzinc.com
Aaron Rhoney Andy Powell Danielle Morris Tom Hartman	City of Harrisonburg	540-434-5928	Aaron.Rhoney@harrisonburgva.gov Andy.Powell@harrisonburgva.gov Danielle.Morris@harrisonburgva.gov Tom.Hartman@harrisonburgva.gov

MINUTES FOR MANDATORY PRE-BID CONFERENCE

"PROPOSED BRIDGE SUBSTRUCTURE REPAIR OF MARTIN LUTHER KING, JR. WAY OVER BLACKS RUN, NS RAILWAY & CHESAPEAKE AVENUE"

CITY OF HARRISONBURG, VA

February 2, 2022

I. INTRODUCTIONS: See attached sign-in sheet.

II. QUESTIONS DUE IN BY: Feb. 9, 2022 at 12:00 PM local time in writing to Questions@harrisonburgva.gov

III. BID OPENING: Feb. 16, 2022 at 3:00 PM (bids due in purchasing office, 3rd floor City Hall) bids will be opened & read in room 11 City Hall

No electronic bids will be accepted.

IV. CONTRACTOR'S BID PACKAGE: see page 0100-2 in the Project Manual for list of items included in Bid Package.

IV. BRIEF DESCRIPTION OF PROJECT: Randy stated that this is a Substructure Repair Project and most of the property around and under this bridge is owned by Norfolk Southern Railroad. A brief description was given on the following Bid Items.

- MOT: The posted speed limit on top of this bridge is 35 mph. No Temporary Pavement line Markings will be required during lane closures. If equipment is left in Lane Closures overnight a TMA will be required, see Special Provisions and Drawings.
- Flowable fill Repair: In front of Abutment B, Contractor will be required to cut 5 – 2'X2' windows in the ground and fill with Flowable Fill, see plans and Specifications.
- Enlarge Expansion Slots: See Plans and Specifications.
- Jacking and Blocking Beams: Contractor shall submit a Jacking and Blocking plan stamped by a Virginia Licensed Professional Engineer, for approval.
- Anchor Bolt and Bearing Replacement: See Plans and Specifications.
- Shotcrete and Concrete Substructure Surface Repair: See Plans and Specifications.
- Painting: Contractor will be required to Clean (to bare metal) and repaint beams 5' (in each direction) from centerline of Bearings and bottom flange of 2 beams (approx.. 5' length), see Plans and Specifications

On sheet 9 of the Drawings, under Bearing Replacement Notes, Reference made to 2016 VDOT Road and Bridge Specifications shall be the 2020 VDOT Road and Bridge Specifications.

VI. TIME OF COMPLETION & LIQUIDATED DAMAGES: This is a Fixed Completion Date Project. Start date May 9, 2022 & must be completed by Nov. 11, 2022 (187 day). See Section 0100-3 for details for the $1500.00 per day Liquidated Damages.

This project has phase construction inspection.

VII. RAILROAD REQUIREMENTS: Randy stated that the contractor needs to read notes in Plans, sheet #3 and Special Provisions in the Project Manual for Railroad requirement and submittals for railroad approval. All the railroad requirements will have to be completed, before the contactor will be allowed on Railroad property.

The City of Harrisonburg will be paying for the railroad Flagging.

VIII. WATER DURING CONSTRUCTION: a meter to connect to hydrant – who will cover the fees?

Please follow spec section 1510-2 in the bid documents. Public Utilities 540-434-9959.

IX. ANSWER CONTRACTOR'S QUESTIONS:

Make existing plans available? Yes will be included in addendum

PUB. RD. REGION	STATE	FEDERAL AID ROUTE	FEDERAL AID PROJECT	STATE ROUTE	STATE PROJECT	SHEET NO.	TOTAL SHEETS
2	VA.				U000-115-101, B601	7(1-34)	

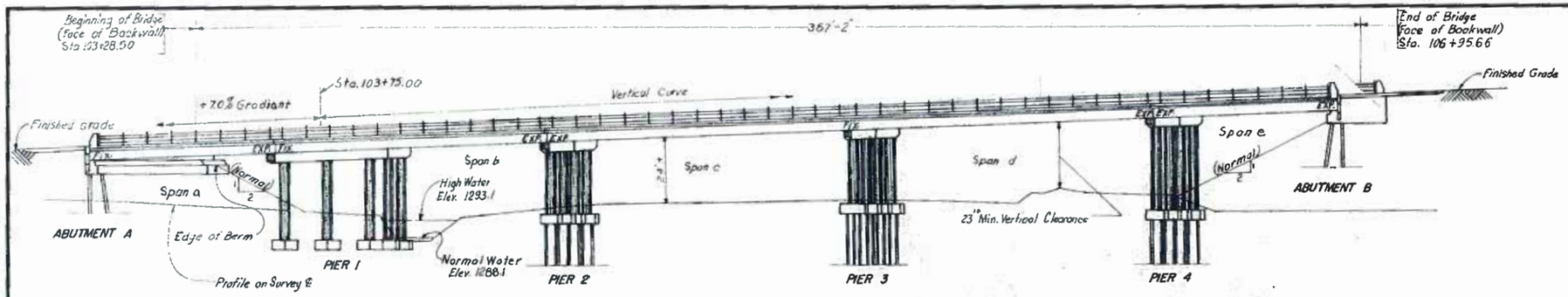

SIDE ELEVATION

GENERAL NOTE:

Widths: 5'-0" sidewalk, 27'-0" roadway, 4'-0" median, 27'-0" roadway, 5'-0" sidewalk. Overall width 68'-0" face-to-face of rails.

Capacity: HS 20-44 loading and modified military load.

Specifications

General - Virginia Department of Highways Road and Bridge Specifications, 1966

Design - A.A.S.H.O. Standard Specifications for Highway Bridges, 1965 and Interim Specifications, 1966-1967.

These plans are incomplete unless accompanied by the Suplemental Specification and Special Provisions included in the contract documents.

Concrete in superstructure shall be class A4. All other concrete shall be class A3.

All reinforcing bar dimensions on the detailed drawings are to centers of bars except where otherwise noted.

Footings of Pier 1 shall rest on solid rock. Bearing capacity of foundation shall be 5 tons/Sq. ft. min..

Structure excavation above Elev. 1288.0 shall be classified as "A"; below, as "B".

Either steel railing shown on sheet 24 or Aluminum railing shown on sheet 25 may be used.

Structural approach slab quantities are not to be included in the bridge contract.

B.M.: Painted "X" on top of curb 55' left Sta. 101+78 Cantrell Ave. Elev. 1299.55

A permit will not be issued in any case for an overall length, including towing vehicle, exceeding 110 feet.

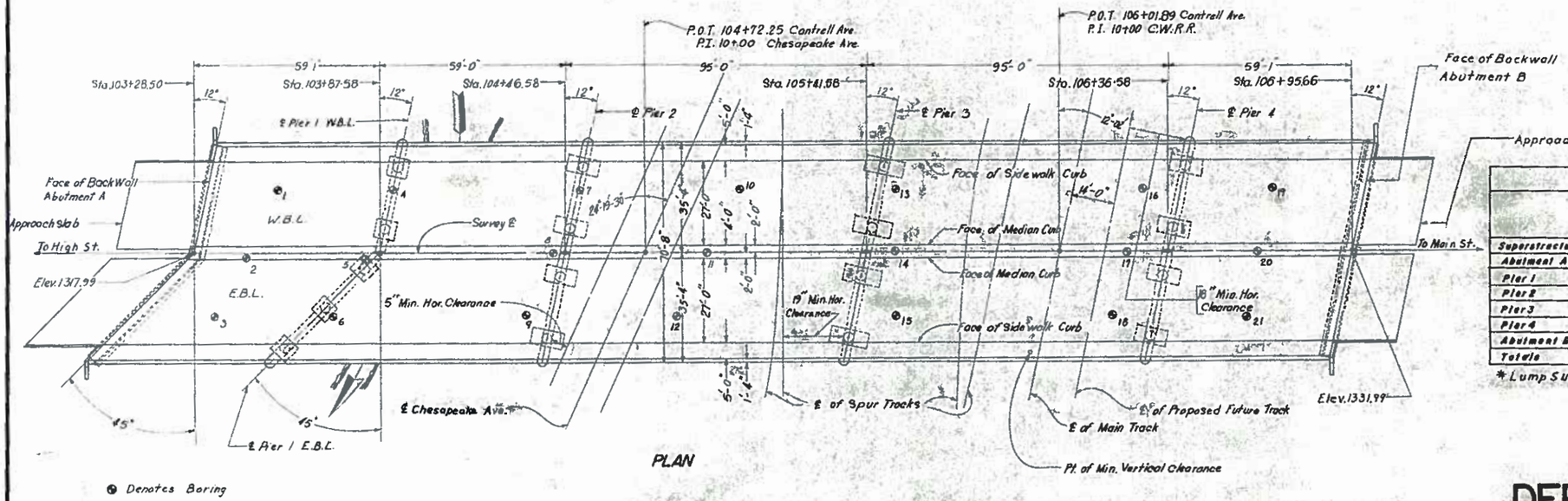

PLAN

⊙ Denotes Boring

ESTIMATED QUANTITIES

	Concrete Cu. Yds. Class A4	Concrete Cu. Yds. Class A3	Reinforcing Steel Lbs.	Structural Steel* Rolled Beams - Lbs. A36	Structural Steel* Rolled Beams - Lbs. A441	Structure Excav. Cu. Yds. A	Structure Excav. Cu. Yds. B	Steel Piles Lin. Ft.	Railing Lin. Ft.
Superstructure	830.1	—	138,097	761,000	121,680	—	—	—	751
Abutment A	—	82.4	4,871	—	—	129	—	571	—
Pier 1	—	98.1	12,928	—	—	96	48	—	—
Pier 2	—	83.8	14,234	—	—	97	—	365	—
Pier 3	—	102.5	19,566	—	—	148	—	362	—
Pier 4	—	87.0	13,972	—	—	108	—	590	—
Abutment B	—	63.6	3,567	—	—	97	—	1,080	—
Totals	830.1	517.3	207,235	761,000	121,680	678	48	2,968	751

* Lump Sum

INDEX OF SHEETS

SHEET NO.	LAYOUT AND SUBSTRUCTURE	SHEET NO.	SUPERSTRUCTURE	SHEET NO.	GENERAL & MISCELLANEOUS
1	GENERAL PLAN & ESTIMATED QUANTITIES	13	SPAN a & b	24	STEEL RAILING
2	DRAINAGE SYSTEM	14	SPAN c & d	25	ALUMINUM RAILING
3	SUBSTRUCTURE LAYOUT & DECK ELEVATIONS	15	SPAN e	26	METAL RAILING MISCELLANEOUS DETAILS
4	ABUTMENT A, E.B.L.	16	SUPERSTRUCTURE — SECTION	27	ELECTRICAL CONDUIT SYSTEM FOR LIGHTING
5	ABUTMENT A, W.B.L.	17,18	SUPERSTRUCTURE MISCELLANEOUS DETAILS		
6	ABUTMENT PILE PLANS	19	ERECTION DIAGRAM	28,29	REINFORCING STEEL
7	ABUTMENT B	20	JOINT DETAILS AT PIERS 2 & 4	30,31	APPROACH SLABS
8	PIER 1, E.B.L.	21	JOINT DETAILS	32,33,34	GEOLOGY
9	PIER 1, W.B.L.	22,23	BEARINGS		
10	PIER 2				
11	PIER 3				
12	PIER 4				

COMMONWEALTH OF VIRGINIA

DEPARTMENT OF HIGHWAYS

PROPOSED BRIDGE

CANTRELL AVE. OVER BLACKS RUN, C&W. RWY. AND CHESAPEAKE AVE.- CITY OF HARRISONBURG

0.09 MI. E. OF HIGH ST.-PROJ. U000-115-101, B601-STA. 105+10

2-95 FT. CONTINUOUS & 3-59 FT. SIMPLE STEEL BEAM SPANS

Richmond, Virginia

Recommended For Approval: _____ Bridge Engineer

Recommended For Approval: _____ 8-22-70 Director of Engineering

Approved: _____ 8/27/70 Deputy Commissioner and Chief Engineer

Drawn by: CHT
Traced by: MAZ
Checked by: FCY

Revised April 7, 1970 Sh. 1
Jan. 30, 1970
Scale 1" = 20'

224-17
Sheet 1 of 34

X671

PUB. RD. REGION	STATE	FEDERAL AID ROUTE	FEDERAL AID PROJECT	STATE PE 101 ROUTE	STATE PE 101 PROJECT	SHEET NO.	TOTAL SHEETS
2	VA.				U000-115-101, B601	702-34	

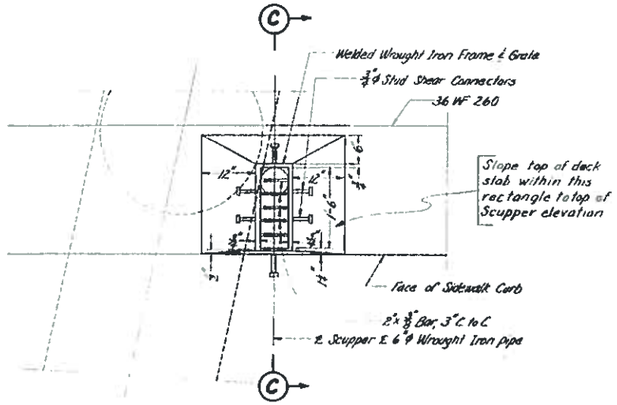

PART PLAN

Note: For location of Scuppers see sheet 3

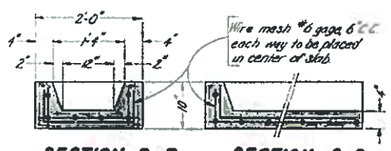

SECTION A-A **SECTION B-B**

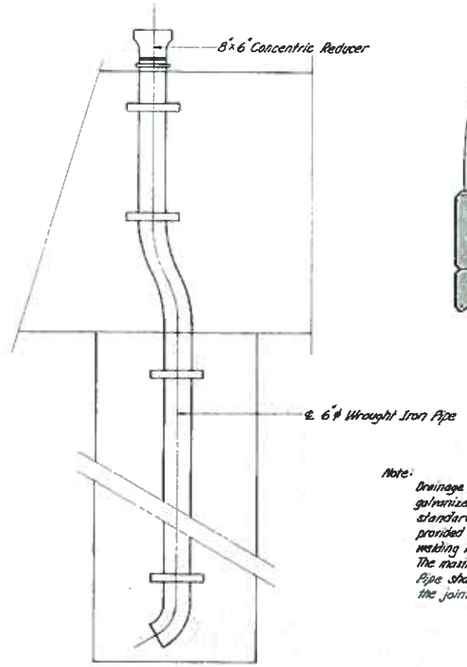

SIDE ELEVATION

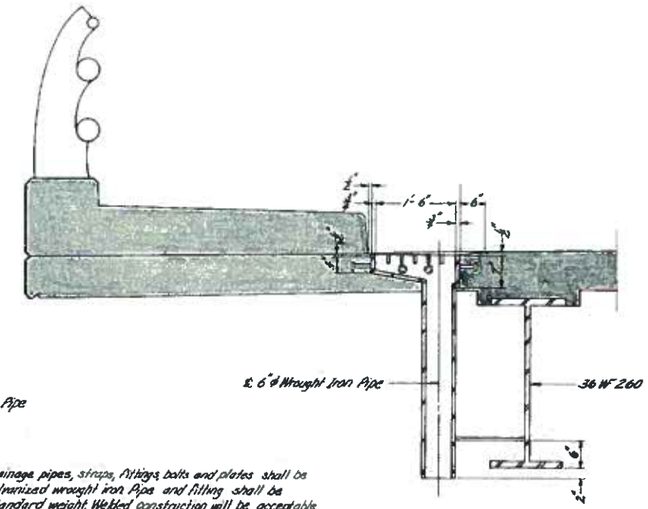

Note:
Drainage pipes, straps, fittings, bolts and plates shall be galvanized wrought iron Pipe and fitting shall be standard weight. Welded construction will be acceptable provided that galvanizing is done after all fabrication welding is complete.
The maximum spacing of brackets shall be 4'-0" " "
Pipe shall extend into reducer a minimum of 2" and the joint shall not be packed.

SECTION C-C

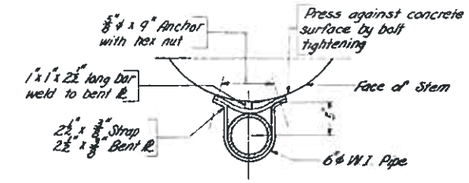

ON STEM

SECTION D-D (AFTER INSTALLATION)

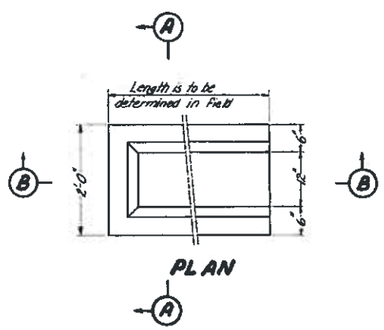

PLAN

SPLASH BLOCK DETAIL

Scale: 3/4"=1'-0"

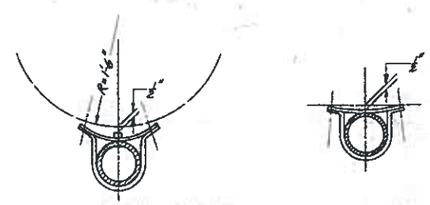

USED ON STEMS **USED ON PIER CAPS**

BRACKET ASSEMBLY (BEFORE INSTALLATION)

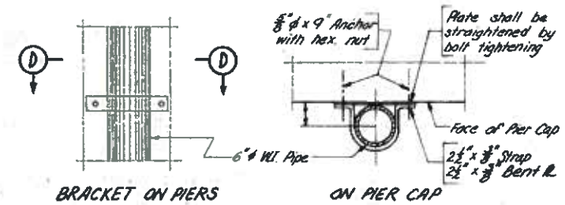

BRACKET ON PIERS **ON PIER CAP**

TYPICAL VIEW **SECTION D-D (AFTER INSTALLATION)**

BRACKETS FOR SUPPORTING PIPE

Scale: 1"=1'-0"

CANTRELL AVE. OVER BLACKS RUN, C.&W. RWY. AND CHESAPEAKE AVE.

DRAINAGE SYSTEM

Virginia Department of Highways
Office of the Bridge Engineer
Richmond, Virginia
Jan., 1970

Drawn by S.S.A.
Traced by W.F.H.
Checked by F.S.Y.

224-17

Sheet 2 of 34

PUB. RD. REGION	STATE	FEDERAL AID ROUTE	FEDERAL AID PROJECT	STATE ROUTE	STATE PROJECT	SHEET NO.	TOTAL SHEETS
2	VA.				U000-115-101, B601	7(3-34)	

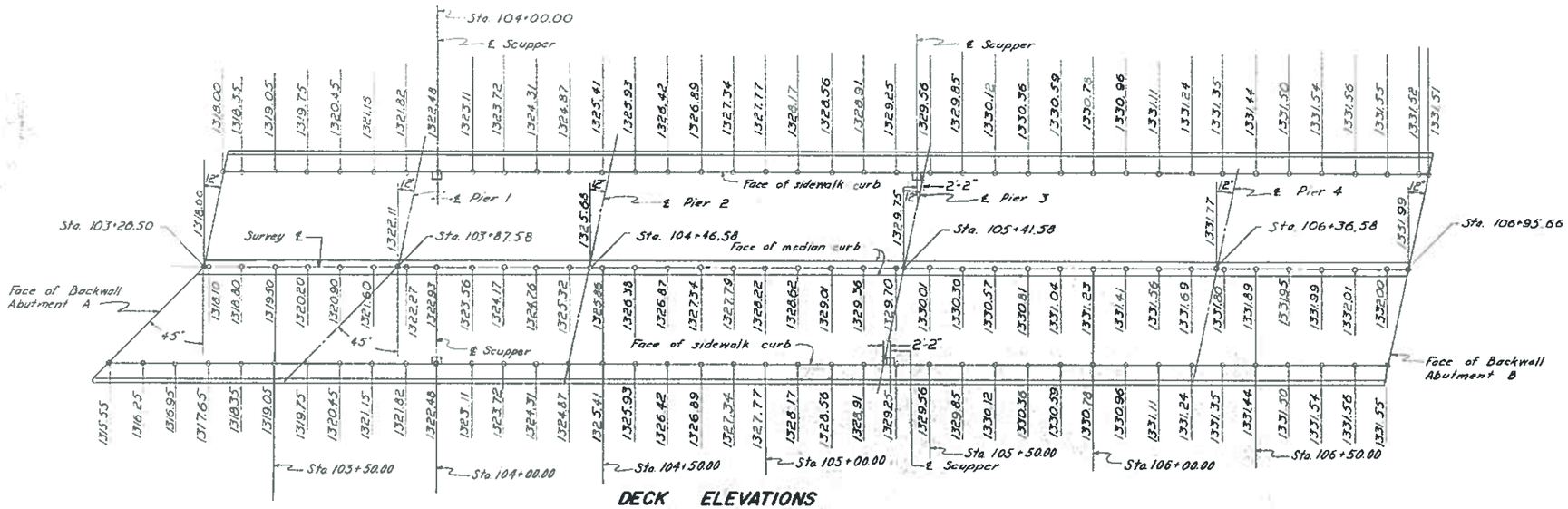

DECK ELEVATIONS

Note: Elevations shown along faces of sidewalk curbs are on top of finished roadway surface. Elevations along Survey ℄ are finished grade (6" below top of median). Elevations are shown at ends of bridge and within spans at 10 ft. intervals. Straight line interpolation on top of finished roadway may be made in any direction between any two points at not greater than 13 foot station intervals.

Note: This layout is to be used only for the purpose of locating fill slopes and footings of abutments and piers. A field check shall be made to determine the consistency between stations and dimensions given. For details of neatwork, see abutment and pier details.

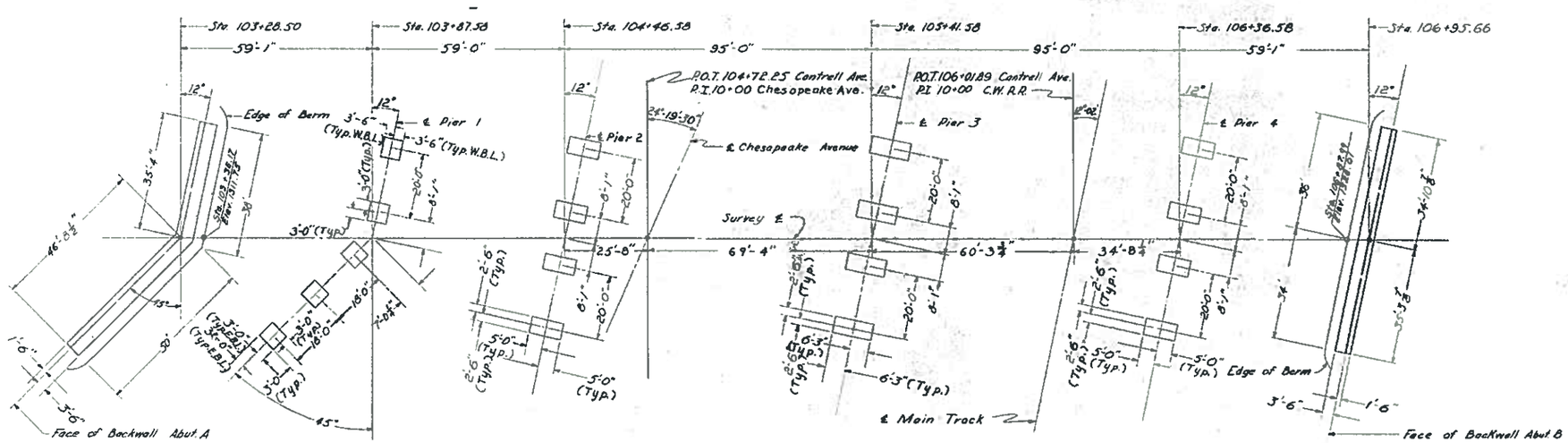

SUBSTRUCTURE LAYOUT

Scale: 1" = 20'

CANTRELL AVE. OVER BLACKS RUN, C. & W. RWY. AND CHESAPEAKE AVE.

SUBSTRUCTURE LAYOUT
DECK ELEVATIONS

Virginia Department of Highways
Office of the Bridge Engineer
Richmond, Virginia

Jan., 1970

DRAWN BY A.J.D.
TRACED BY C.H.T.
CHECKED BY K.C.K.

224-17
Sheet 3 of 34

PUB. RD. REGION	STATE	FEDERAL AID ROUTE	FEDERAL AID PROJECT	STATE ROUTE	STATE PROJECT	SHEET NO.	TOTAL SHEETS
2	VA.				U000-115-101, B601	114-34A	

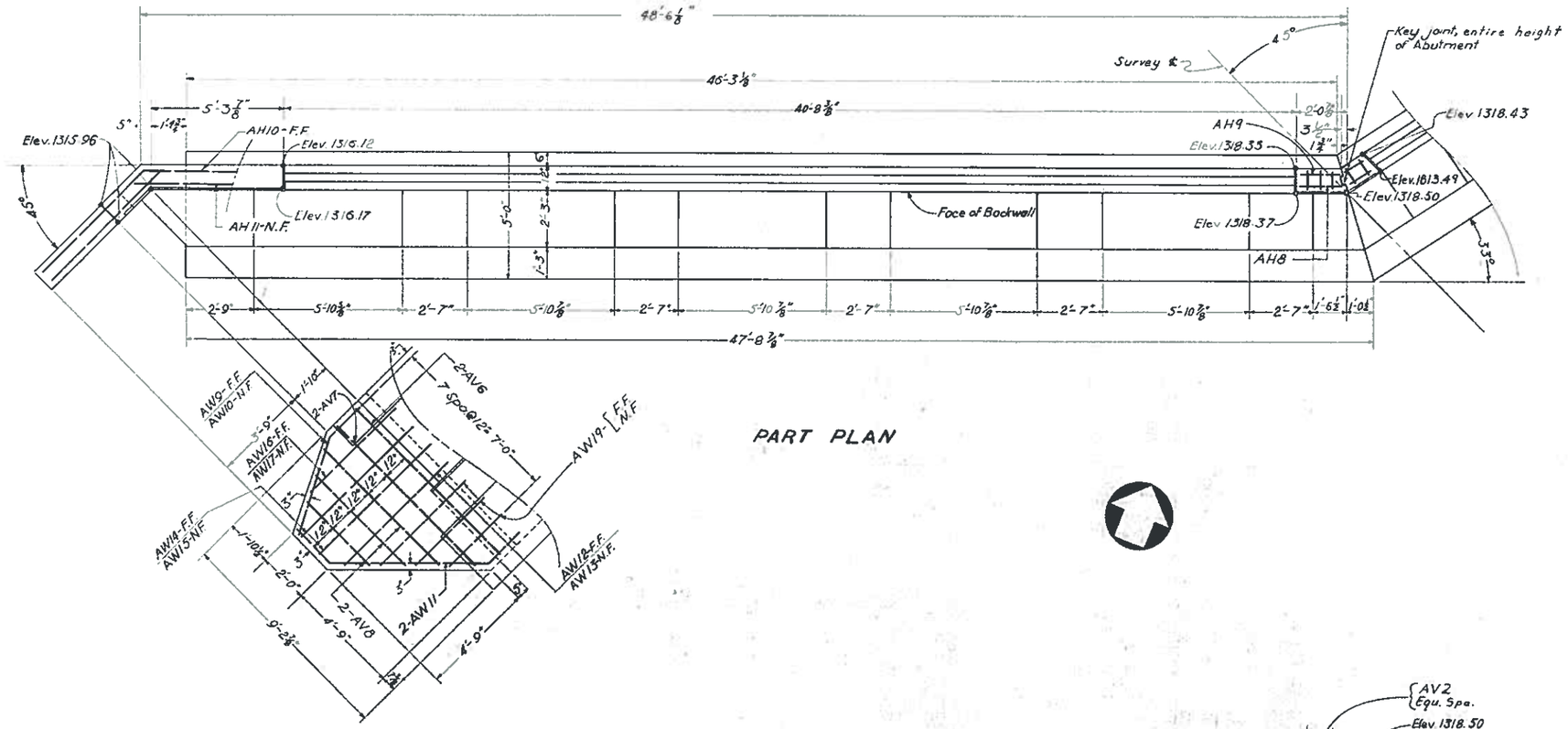

PART PLAN

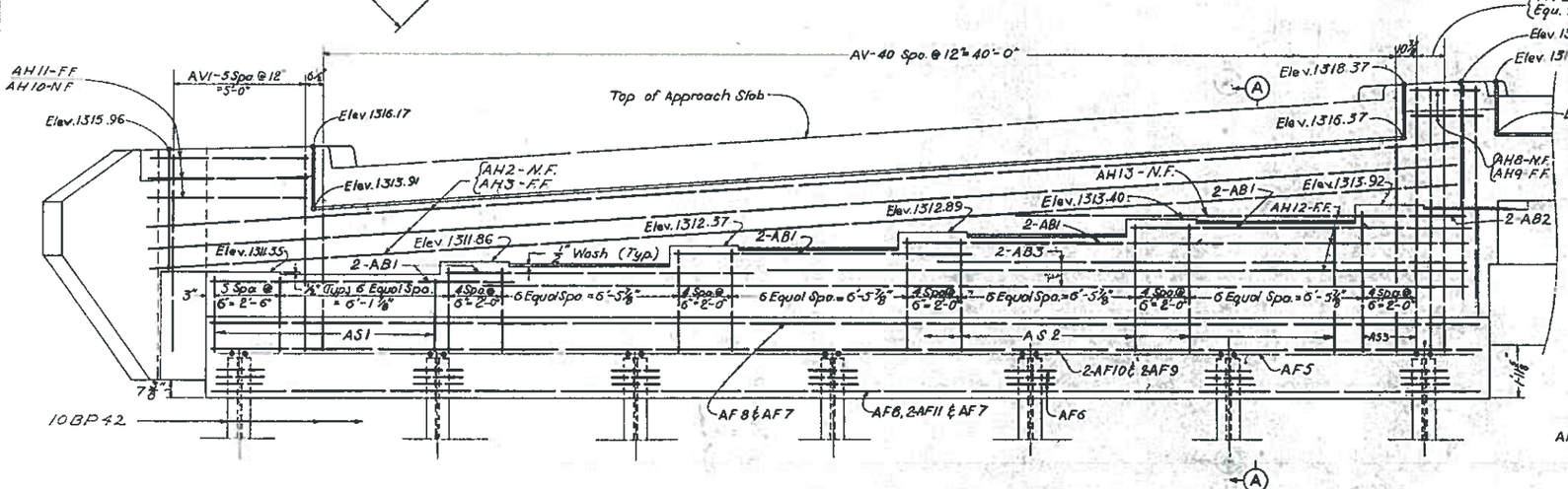

PART FRONT ELEVATION

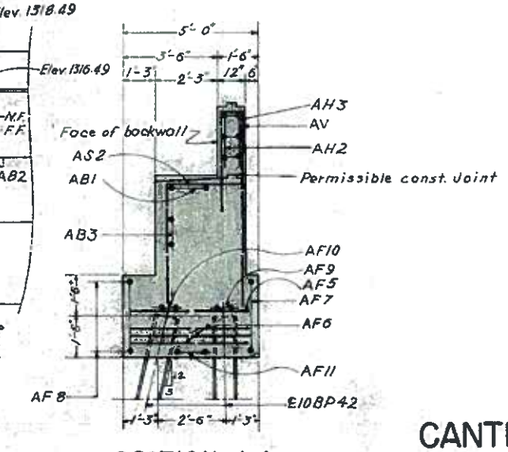

SECTION A-A

CANTRELL AVE. OVER BLACKS RUN, C.&W. RWY. AND CHESAPEAKE AVE.

ABUTMENT A-E.B.L.

Virginia Department of Highways
Office of the Bridge Engineer
Richmond, Virginia
Jan., 1970

Drawn by R.L.S.
Traced by MAR
Checked by F.C.Y.

Scale: 3/8" = 1'-0" unless otherwise noted

224-17
Sheet 4 of 34

PUB. RD. REGION	STATE	FEDERAL AID ROUTE	FEDERAL AID PROJECT	STATE PE 101 ROUTE	STATE PE 101 PROJECT	SHEET NO.	TOTAL SHEETS
2	VA.				U000-115-101, B601	7(5-34)	

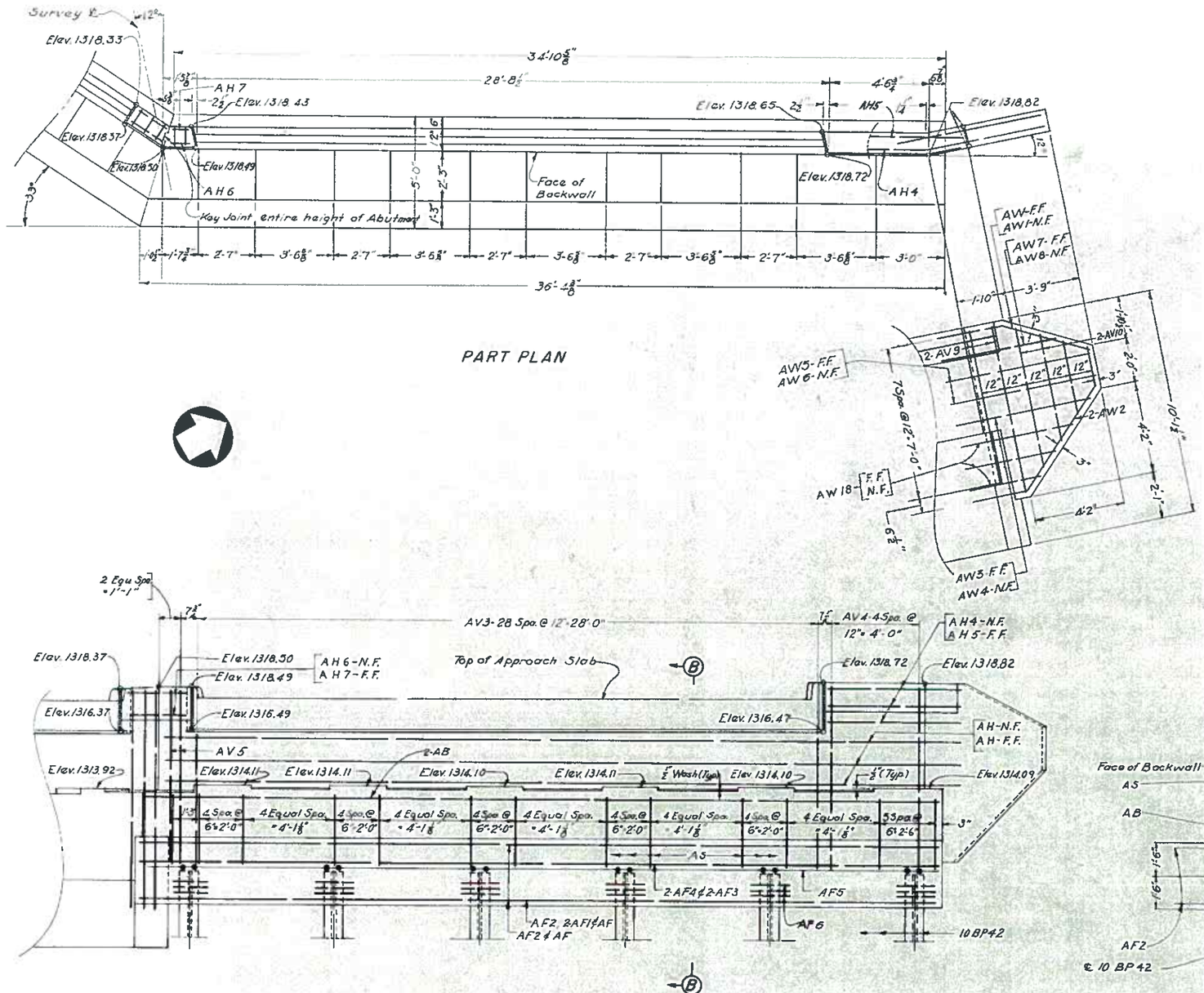

CANTRELL AVE. OVER BLACKS RUN, C.&W. RWY. AND CHESAPEAKE AVE.

ABUTMENT A – W.B.L.

Virginia Department of Highways
Office of the Bridge Engineer
Richmond, Virginia

Jan., 1970

Drawn by R.L.S.
Traced by A.J.D.
Checked by F.C.Y.

Scale: 3/8" = 1'-0"

224-17

Sheet 5 of 34

PUB. RD. REGION	STATE	FEDERAL AID ROUTE	FEDERAL AID PROJECT	STATE ROUTE	STATE PROJECT	SHEET NO.	TOTAL SHEETS
2	VA.				0000-115-101, B601	7/6-34	

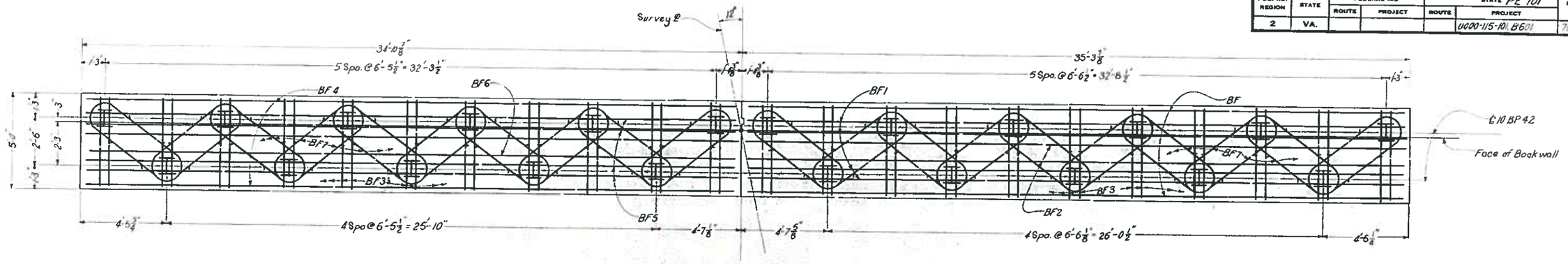

PILE PLAN- ABUTMENT B

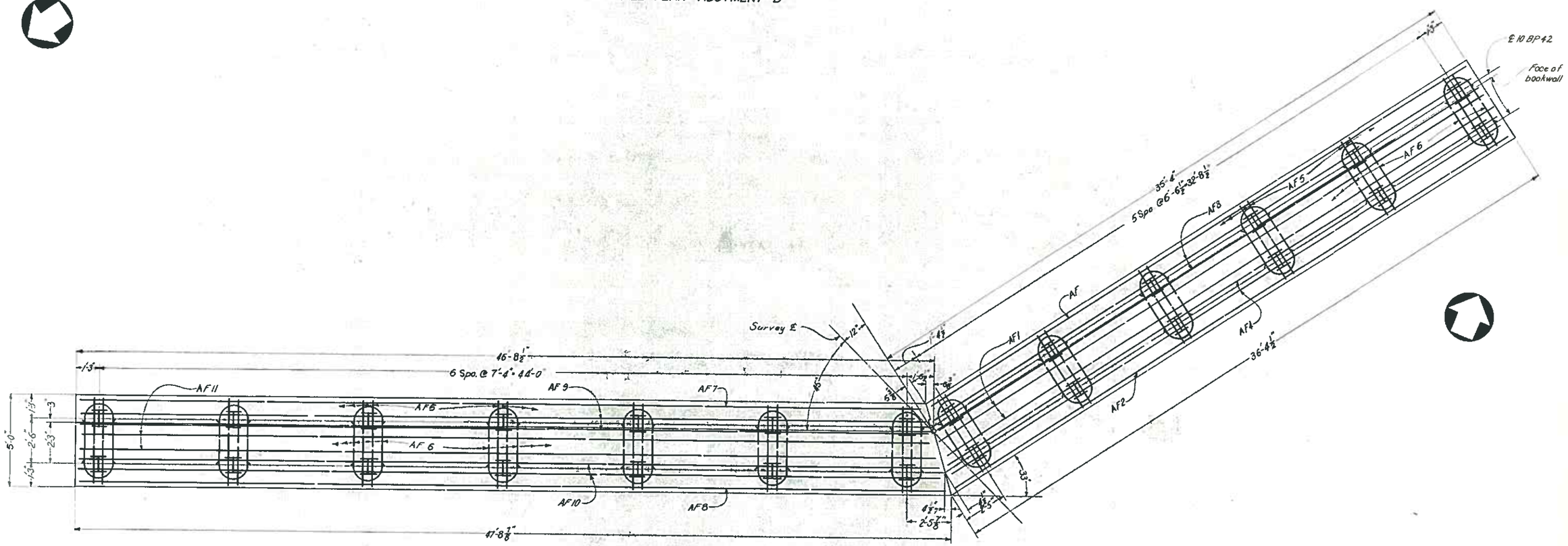

PILE PLAN- ABUTMENT A

CANTRELL AVE. OVER BLACKS RUN, C.&W. RWY. AND CHESAPEAKE AVE.

ABUTMENT PILE PLANS

Virginia Department of Highways
Office of the Bridge Engineer
Richmond, Virginia

Jan., 1970

Drawn by R.L.S.
Traced by NMG
Checked by E.C.Y.

Scale: 3/8" = 1'-0"

224-17

Sheet 6 of 34

PUB. RD. REGION	STATE	FEDERAL AID ROUTE	FEDERAL AID PROJECT	STATE ROUTE	STATE PROJECT	SHEET NO.	TOTAL SHEETS
2	VA.				U000-115-101, B601	3(7-34)	

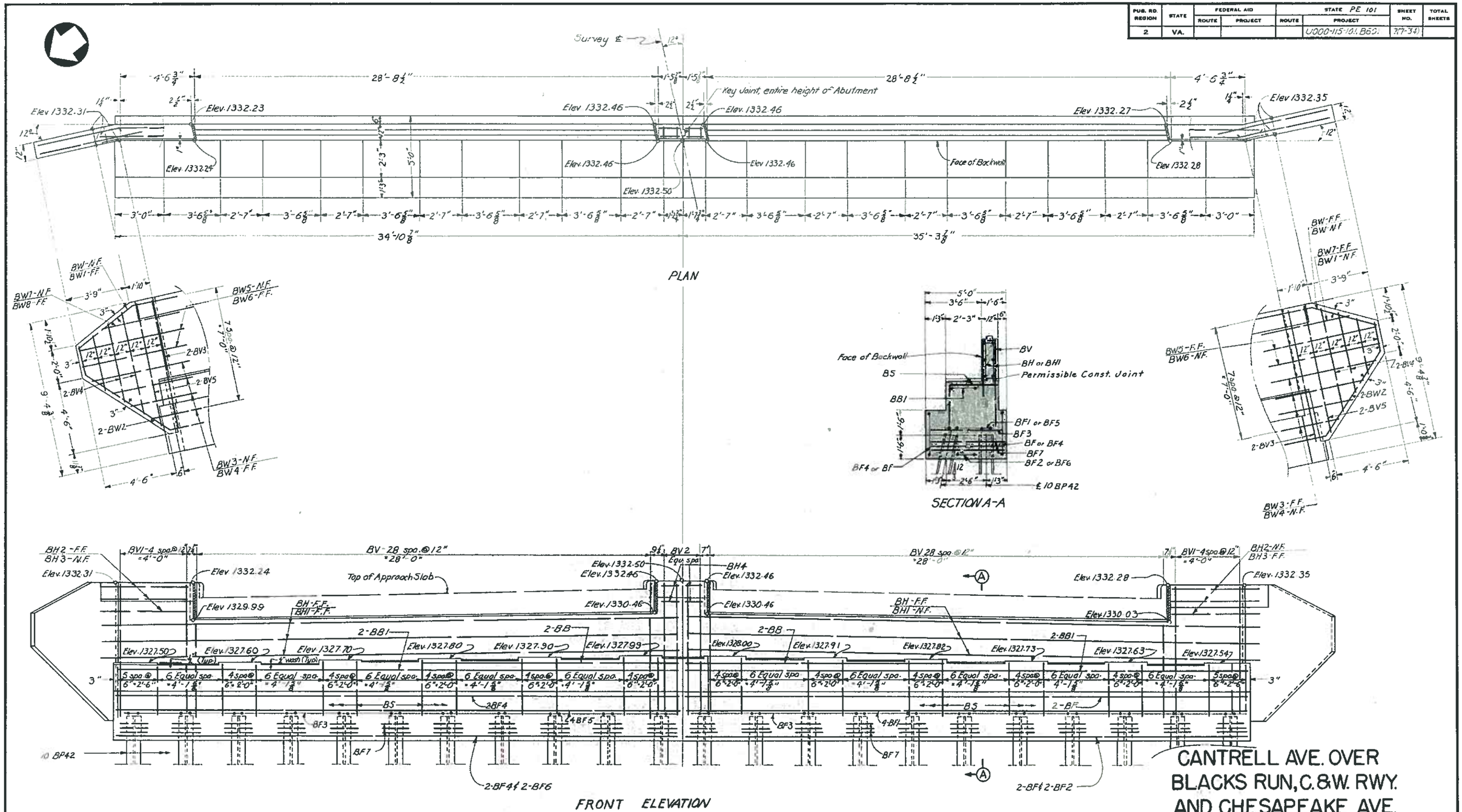

CANTRELL AVE. OVER BLACKS RUN, C.&W. RWY. AND CHESAPEAKE AVE.

ABUTMENT B

Virginia Department of Highways
Office of the Bridge Engineer
Richmond, Virginia
Jan., 1970

Drawn by L.H.O.
Traced by C.A.O.
Checked by F.C.L.

Scale ⅜" = 1'-0"

224-17
Sheet 7 of 34

PUB. RD. REGION	STATE	FEDERAL AID ROUTE	FEDERAL AID PROJECT	STATE PE 101 ROUTE	STATE PE 101 PROJECT	SHEET NO.	TOTAL SHEETS
2	VA.				U000-115-101, B601	718-347	

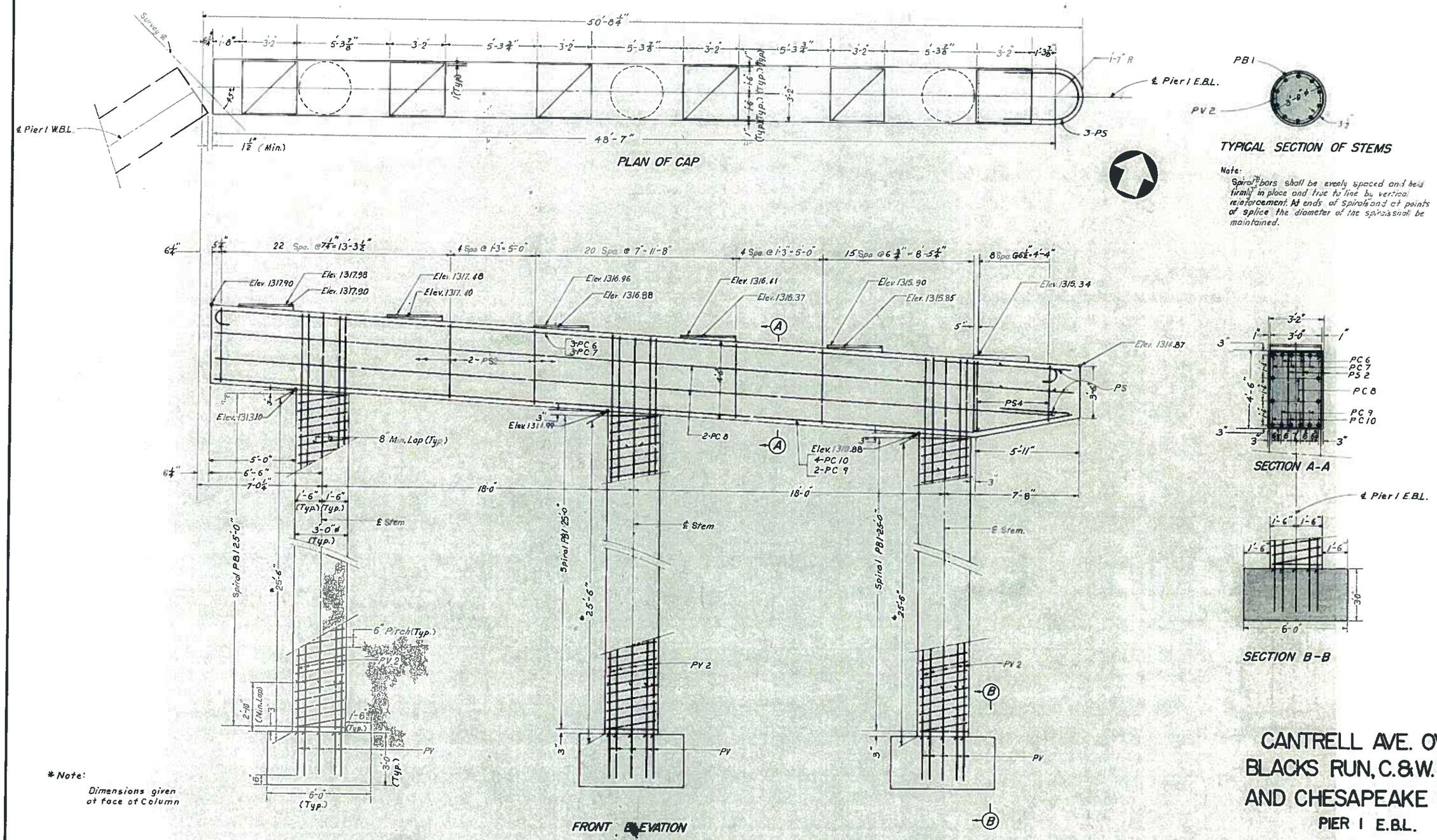

CANTRELL AVE. OVER BLACKS RUN, C.&W. RWY. AND CHESAPEAKE AVE.

PIER I E.B.L.

Virginia Department of Highways
Office of the Bridge Engineer
Richmond, Virginia

Jan., 1970

Scale 3/8" = 1'-0"

224-17
Sheet 8 of 34

Drawn by N.M.Z.
Traced by N.M.Z.
Checked by W.A.C.

PUB. RD. REGION	STATE	FEDERAL AID ROUTE	FEDERAL AID PROJECT	STATE PE 101 ROUTE	STATE PE 101 PROJECT	SHEET NO.	TOTAL SHEETS
2	VA.				1000 115-10, B601	7(9-34)	

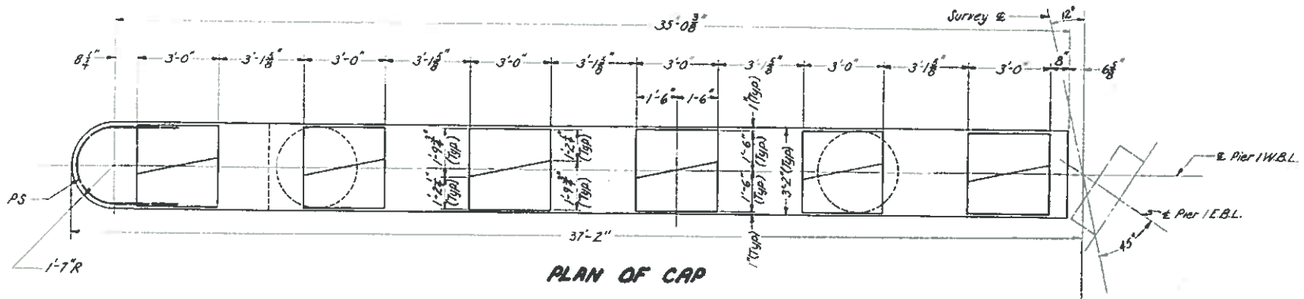

PLAN OF CAP

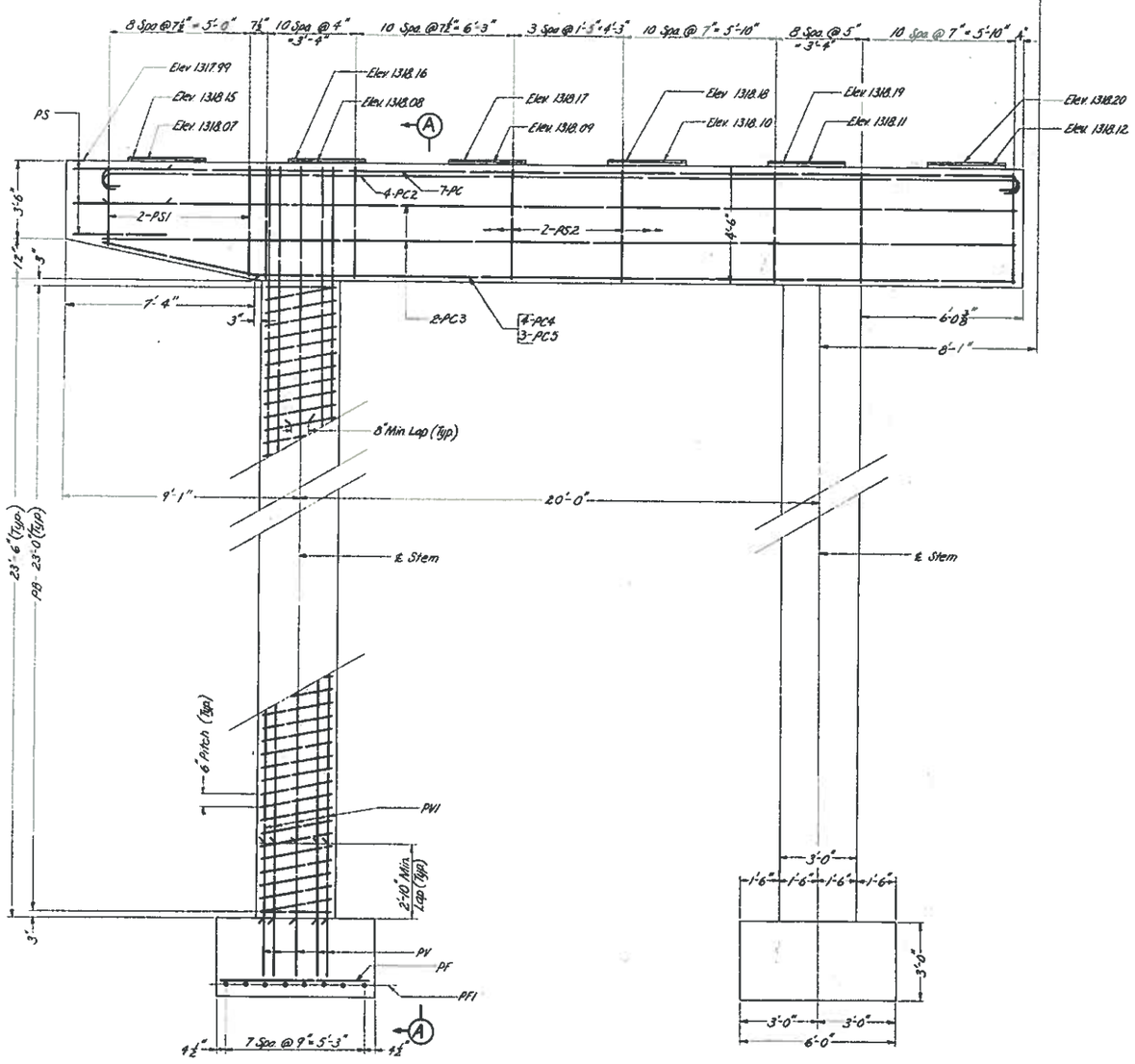

FRONT ELEVATION

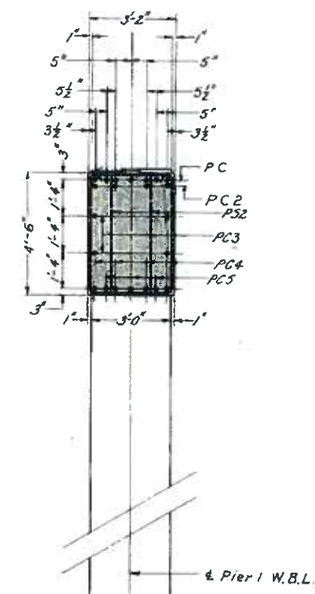

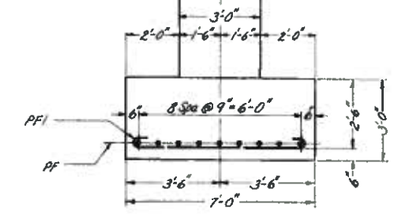

SECTION A-A

Note:
Spiral bars shall be evenly spaced and held firmly in place and true to line by vertical reinforcement. At end of spirals and at points of splice the diameter of the spiral shall be maintained.

TYPICAL SECTION OF STEMS

CANTRELL AVE. OVER BLACKS RUN, C.&W. RWY. AND CHESAPEAKE AVE.

PIER 1 W.B.L.

Virginia Department of Highways
Office of the Bridge Engineer
Richmond, Virginia

Jan., 1970

Drawn by C.H.T.
Traced by W.F.M.
Checked by F.C.Y.

Scale: 3/8" = 1'-0"

224-17
Sheet 9 of 34

PUB. RD. REGION	STATE	FEDERAL AID ROUTE	FEDERAL AID PROJECT	STATE ROUTE	STATE PROJECT	SHEET NO.	TOTAL SHEETS
2	VA.				U000-115-101, B601	7(10-34)	

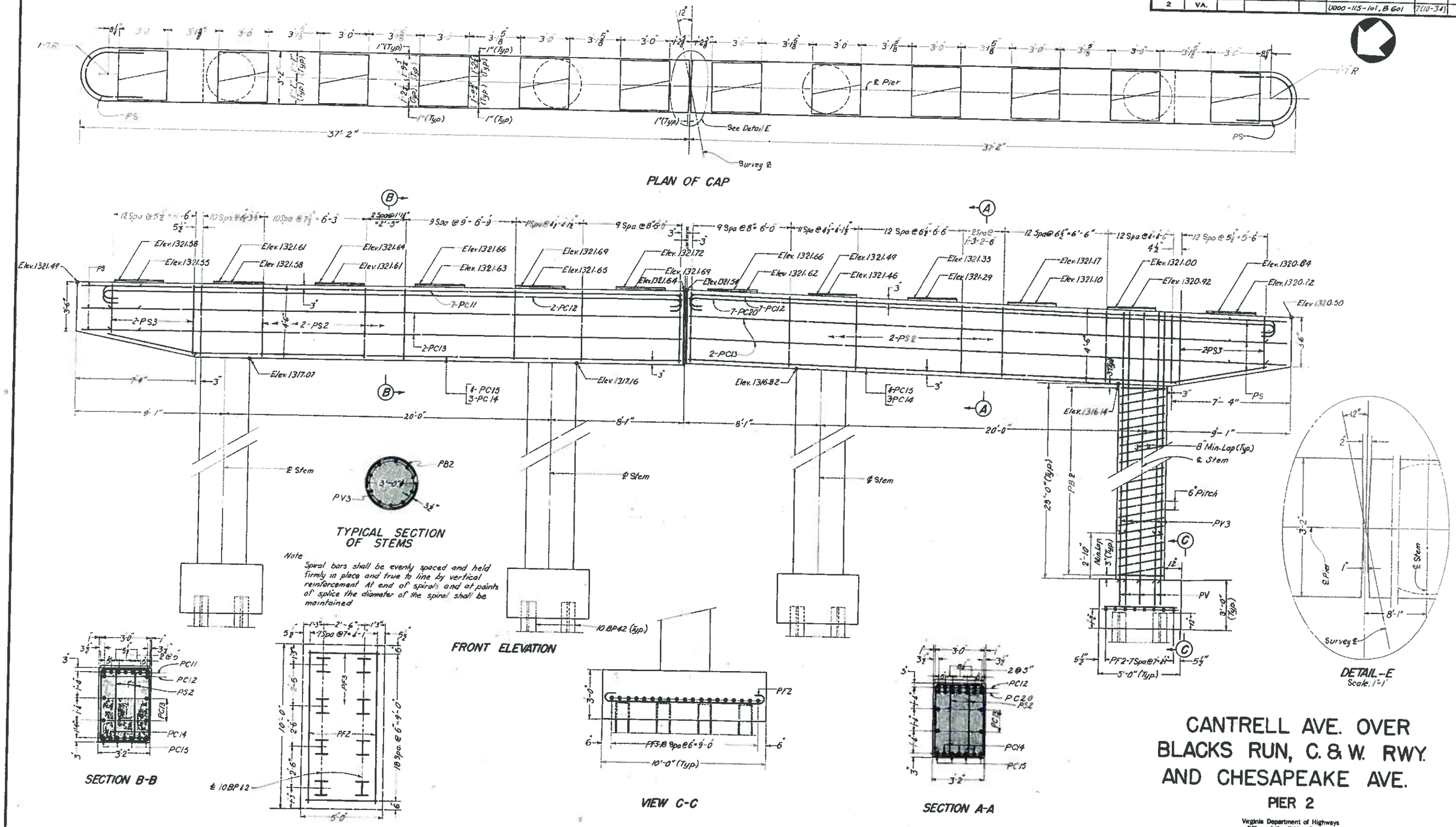

CANTRELL AVE. OVER BLACKS RUN, C. & W. RWY. AND CHESAPEAKE AVE.

PIER 2

Virginia Department of Highways
Office of the Bridge Engineer
Richmond, Virginia
Jan., 1970

DRAWN BY N.M.Z.
TRACED BY N.M.Z.
CHECKED BY P.L.V.

224-17
Sheet 10 of 34

PUB. RD. REGION	STATE	FEDERAL AID ROUTE	FEDERAL AID PROJECT	STATE ROUTE	STATE PROJECT	SHEET NO.	TOTAL SHEETS
2	VA.				PE 101 U000-115-101, B601	7 of 34	

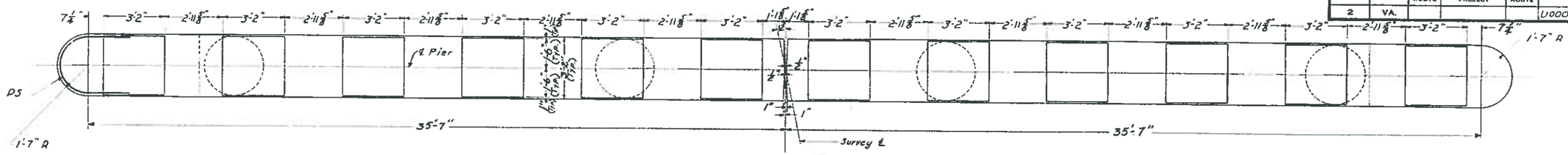

PLAN OF CAP

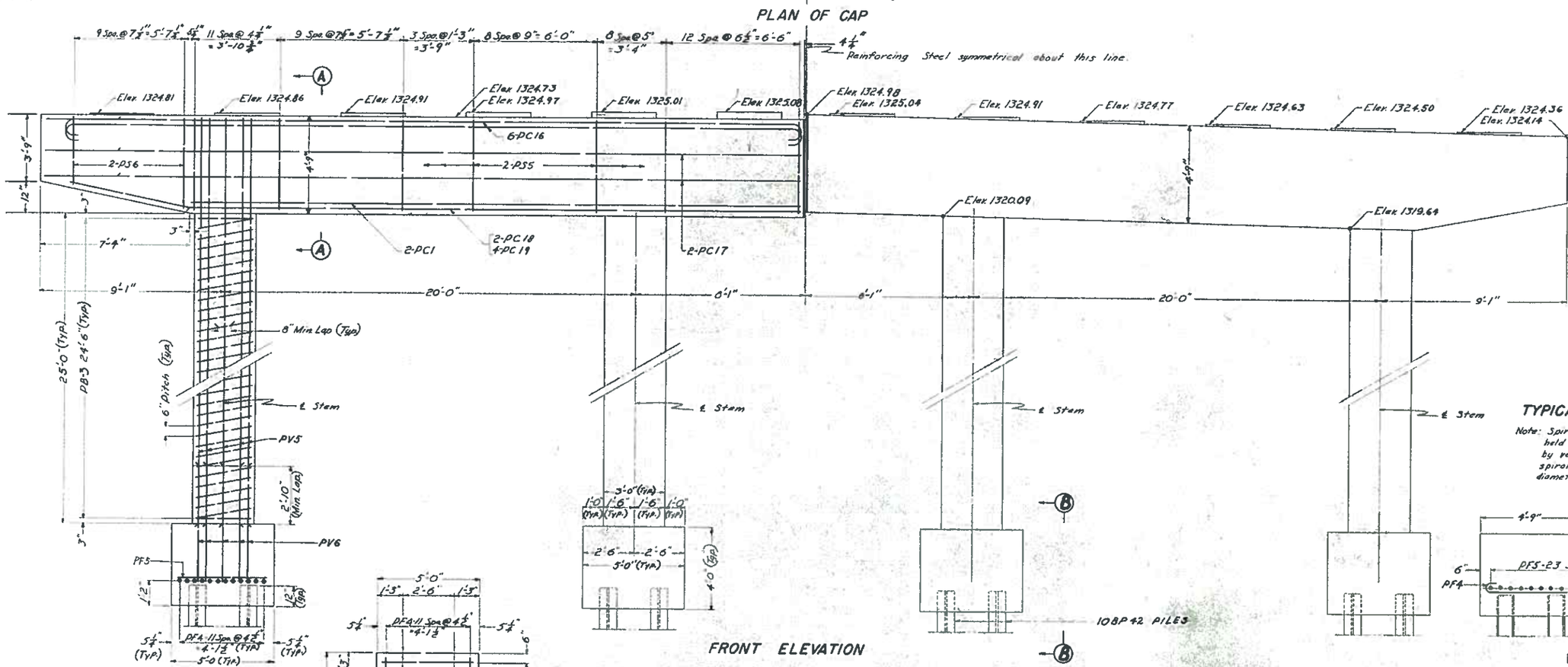

FRONT ELEVATION

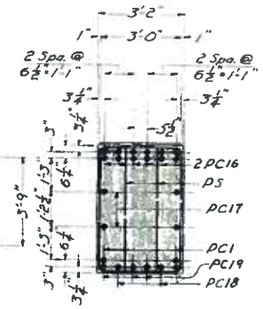

SECTION A-A

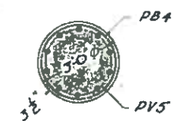

TYPICAL SECTION OF STEMS

Note: Spiral bars shall be evenly spaced and held firmly in place and true to line by vertical reinforcement. At ends of spirals and at points of splice the diameter of the spiral shall be maintained.

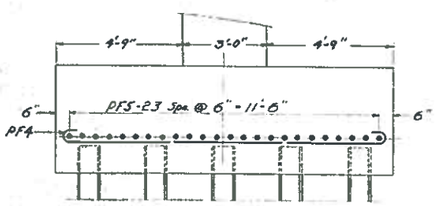

VIEW B-B

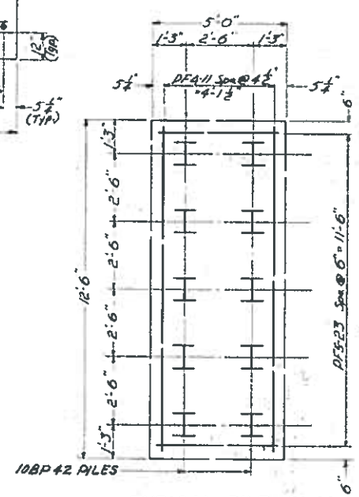

TYPICAL PILE PLAN

CANTRELL AVE. OVER BLACKS RUN, C.&W. RWY. AND CHESAPEAKE AVE.

PIER 3

Virginia Department of Highways
Office of the Bridge Engineer
Richmond, Virginia

Jan., 1970

224-17

Drawn by C.H.T.
Traced by C.H.T.
Checked by F.S.Y.

Scale: ⅛" = 1'-0"

Sheet 11 of 34

PUB. RD. REGION	STATE	FEDERAL AID ROUTE	FEDERAL AID PROJECT	STATE ROUTE	STATE PROJECT	SHEET NO.	TOTAL SHEETS
2	VA.				0000-115-101, B601	7(12-34)	

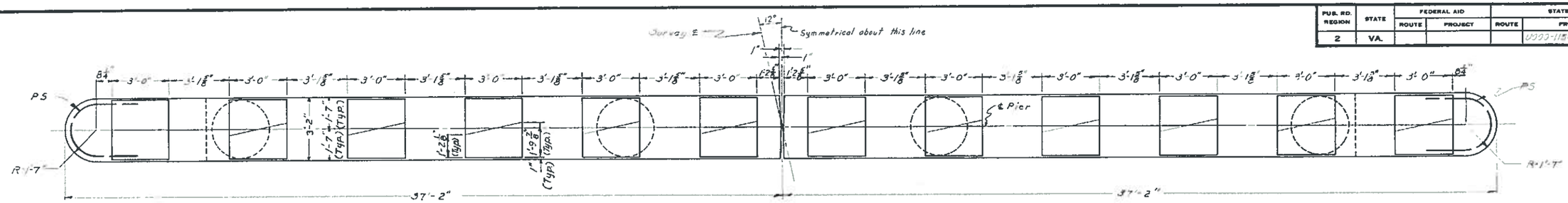

PLAN OF CAP

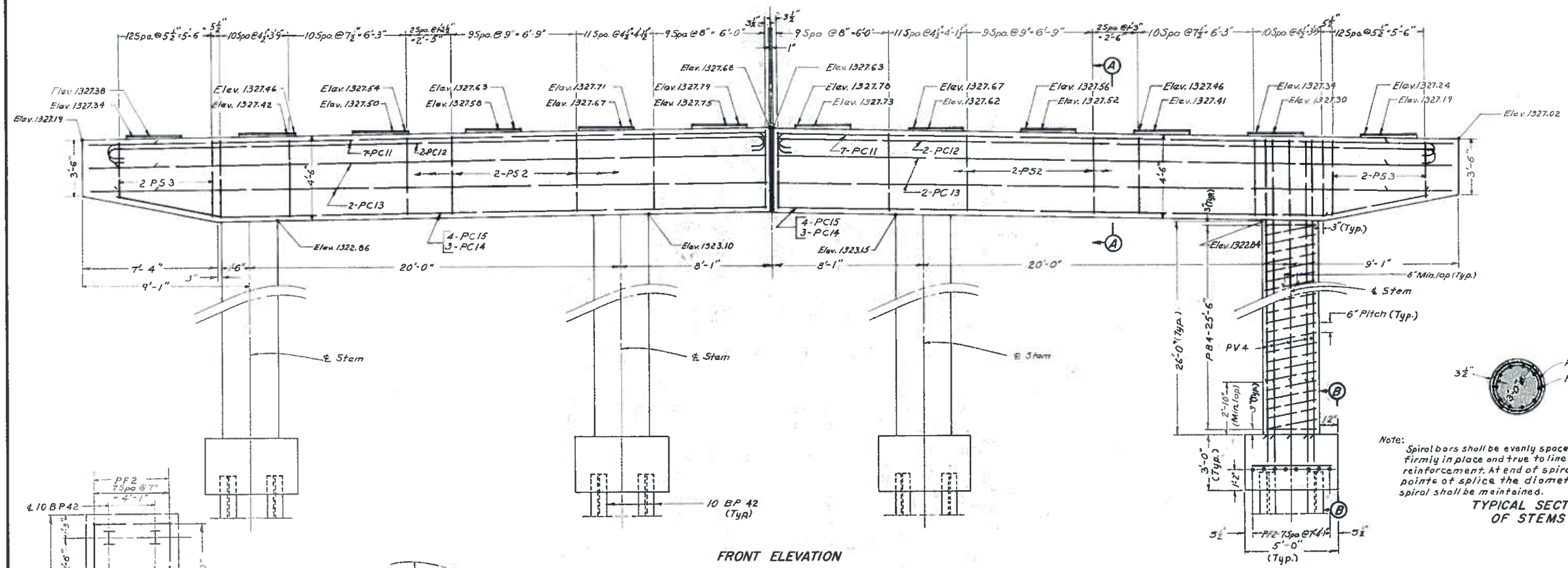

CANTRELL AVE. OVER BLACKS RUN, C.&W. RWY. AND CHESAPEAKE AVE.

PIER 4

Virginia Department of Highways
Office of the Bridge Engineer
Richmond, Virginia
Jan, 1970

DRAWN BY M.M.Z.
TRACED BY A.J.D.
CHECKED BY PLV

Scale: 3/8" = 1'-0"

224-17
Sheet 12 of 34

PUB. RD. REGION	STATE	FEDERAL AID ROUTE	FEDERAL AID PROJECT	STATE ROUTE	STATE PROJECT	SHEET NO.	TOTAL SHEETS
2	VA.				PE 101 U000-115-101, B601	7(of 34)	

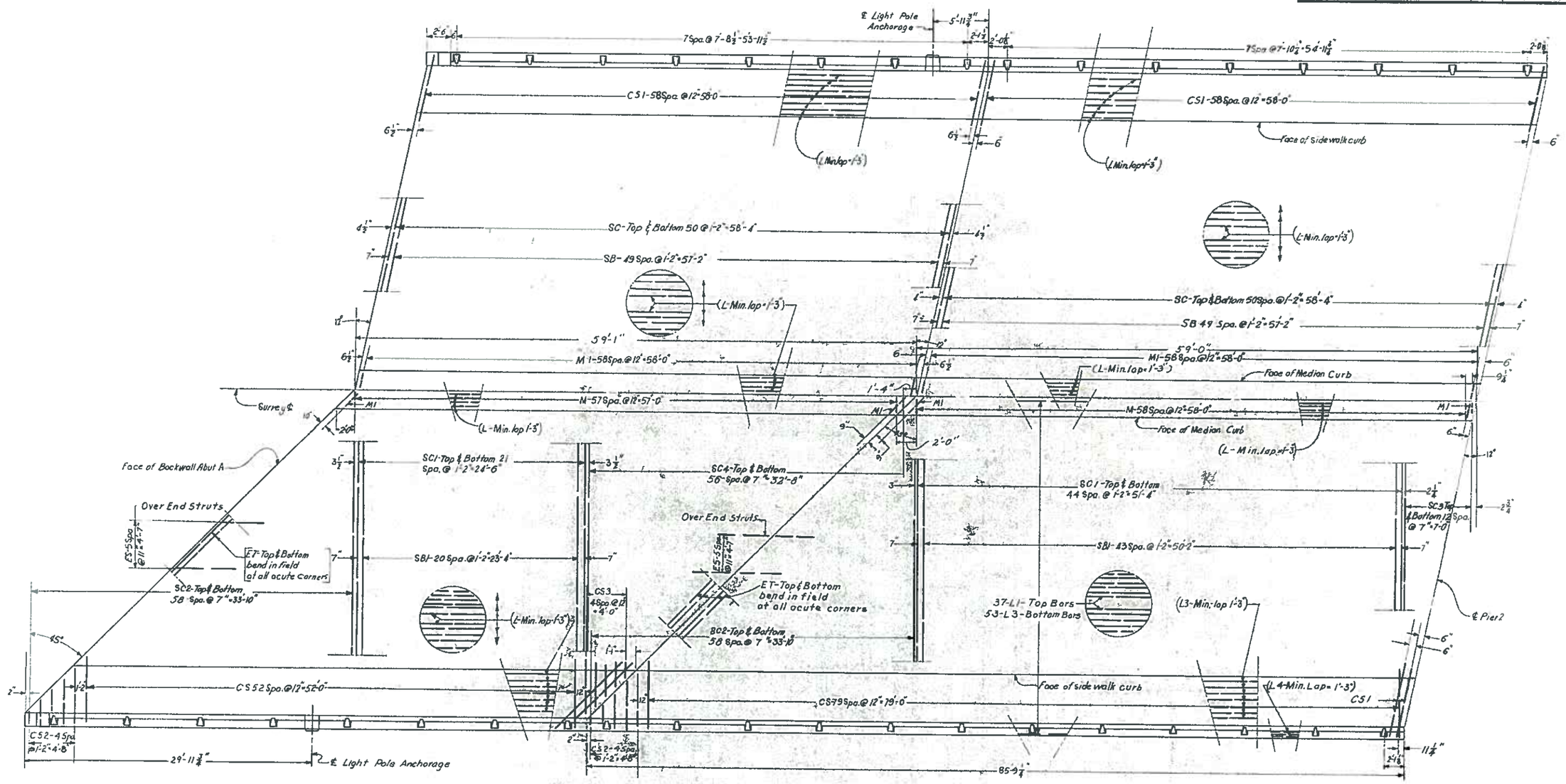

PLAN

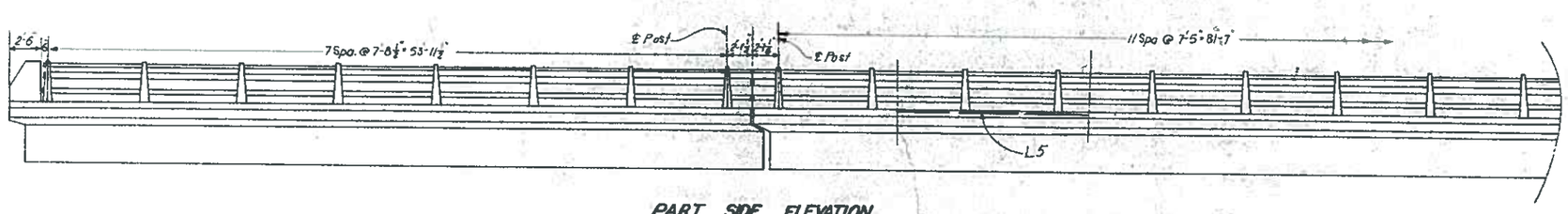

PART SIDE ELEVATION

CANTRELL AVE. OVER BLACKS RUN, C. & W. RWY. AND CHESAPEAKE AVE.

SUPERSTRUCTURE

SPANS a & b

Virginia Department of Highways
Office of the Bridge Engineer
Richmond, Virginia
Jan., 1970

Drawn by S.S.A.
Traced by K.M.Z.
Checked by F.C.Y.

Scale: ⅛"=1'-0"

224-17
Sheet 13 of 34

PUB. RD REGION	STATE	FEDERAL AID ROUTE	FEDERAL AID PROJECT	STATE ROUTE	STATE PROJECT	SHEET NO.	TOTAL SHEETS
2	VA.				U000-115-101,B601	224-34	

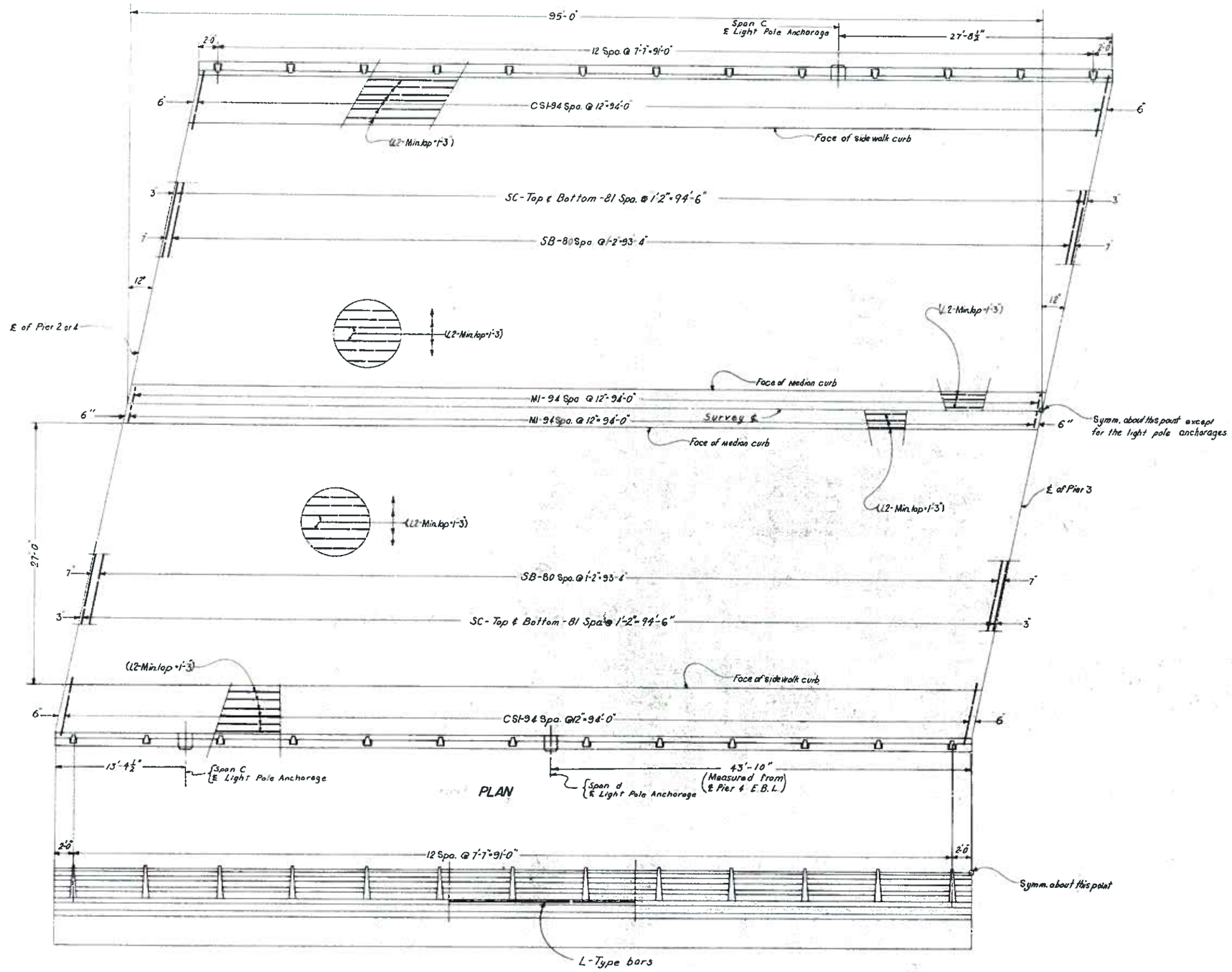

CANTRELL AVE. OVER BLACKS RUN, C. & W. RWY. AND CHESAPEAKE AVE.

SUPERSTRUCTURE

SPANS c & d

Virginia Department of Highways
Office of the Bridge Engineer
Richmond, Virginia
Jan., 1970

Drawn by N.M.Z.
Traced by N.M.Z.
Checked by F.S.Y.

Scale: ⅜" = 1'-0"

224-17
Sheet 14 of 34

PUB. RD. REGION	STATE	FEDERAL AID ROUTE	FEDERAL AID PROJECT	STATE PE 101 ROUTE	STATE PE 101 PROJECT	SHEET NO.	TOTAL SHEETS
2	VA.				U000-115-101, B601	7(of 34)	

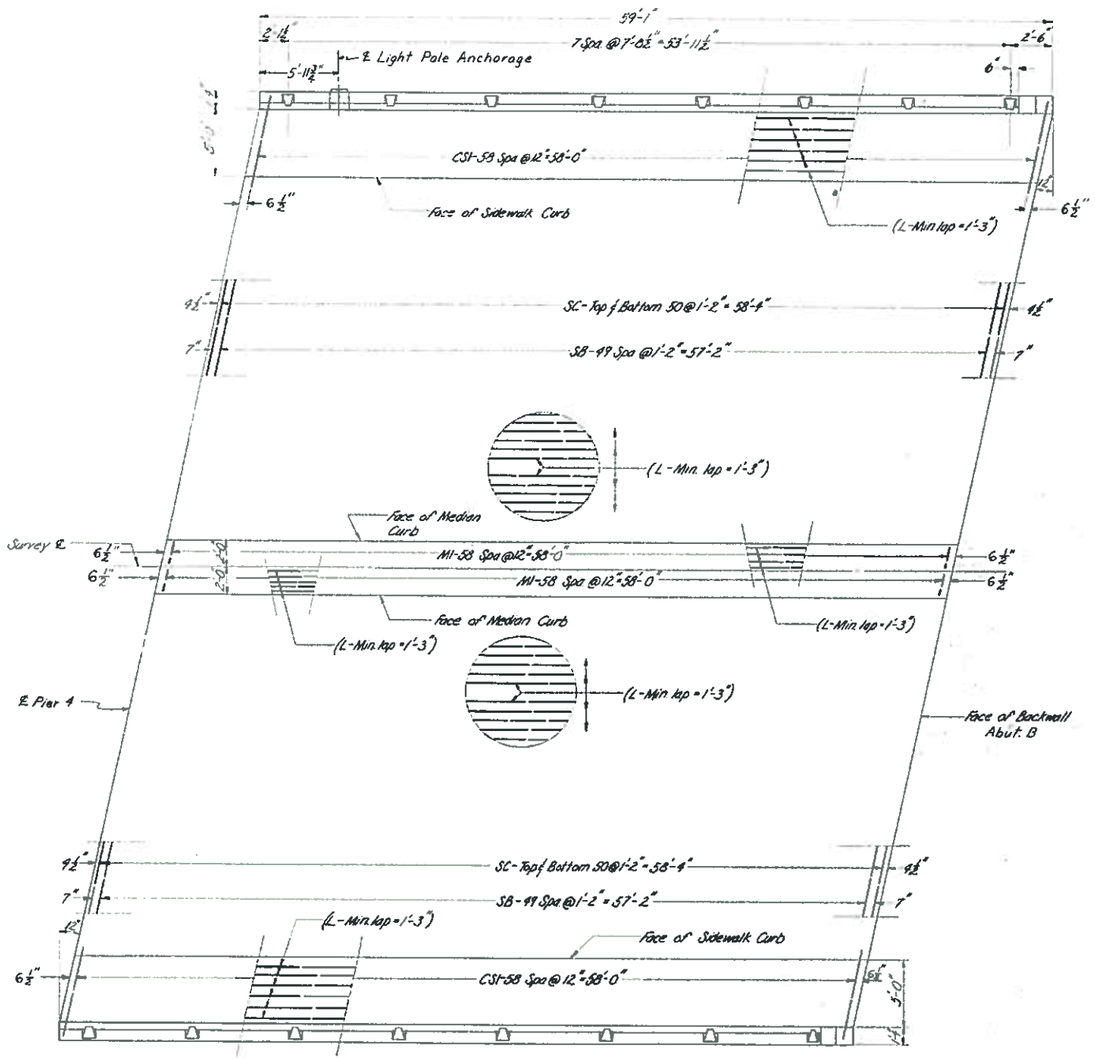

PLAN

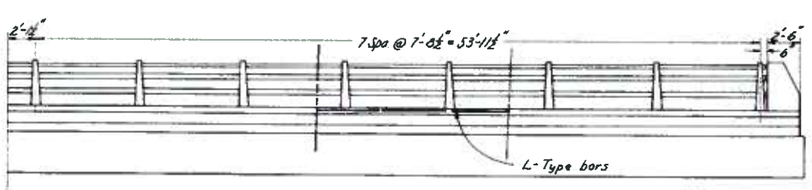

SIDE ELEVATION

Drawn by W.F.M.
Traced by W.F.M.
Checked by F.C.Y.

CANTRELL AVE. OVER BLACKS RUN, C. & W. RWY. AND CHESAPEAKE AVE.

SUPERSTRUCTURE

SPAN e

Virginia Department of Highways
Office of the Bridge Engineer
Richmond, Virginia
Jan., 1970

224-17

Scale 1/8" = 1'-0"

Sheet 1 of 34

PUB. RD. REGION	STATE	FEDERAL AID ROUTE	FEDERAL AID PROJECT	STATE ROUTE	STATE PROJECT	SHEET NO.	TOTAL SHEETS
2	VA.				U000-115-101, B601	7(15-34)	

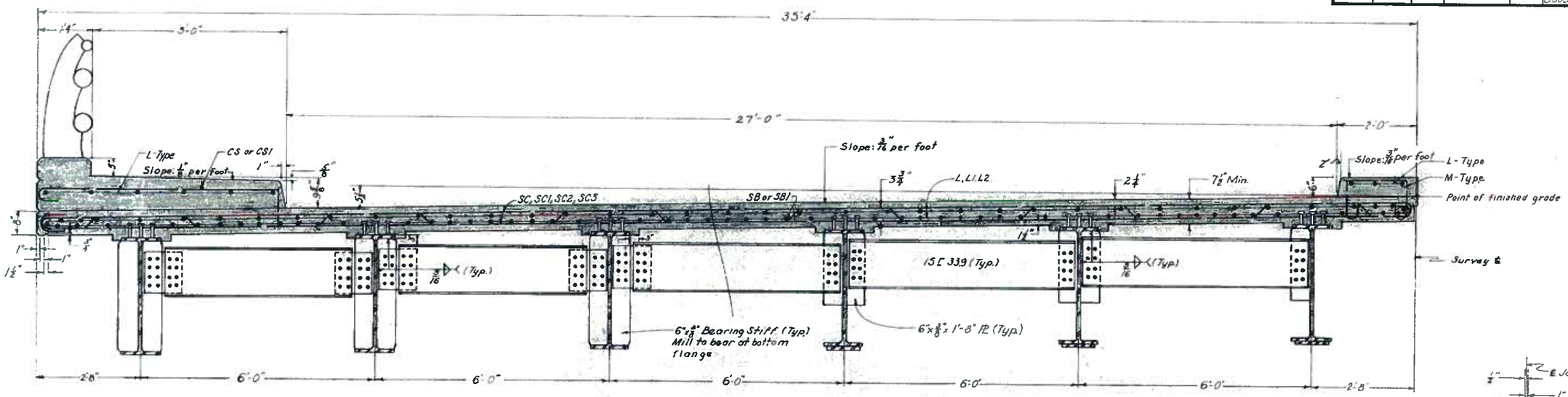

AT SUPPORTS
(ALL BEARINGS EXCEPT PIER 3)

AT MIDSPAN
(ALL SPANS)

For Beams detail see sheet 17 & 18

HALF TRANSVERSE SECTION

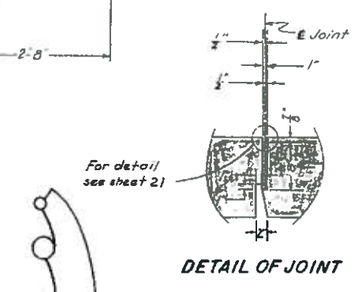

DETAIL OF JOINT

Scale: 1"=1'-0"

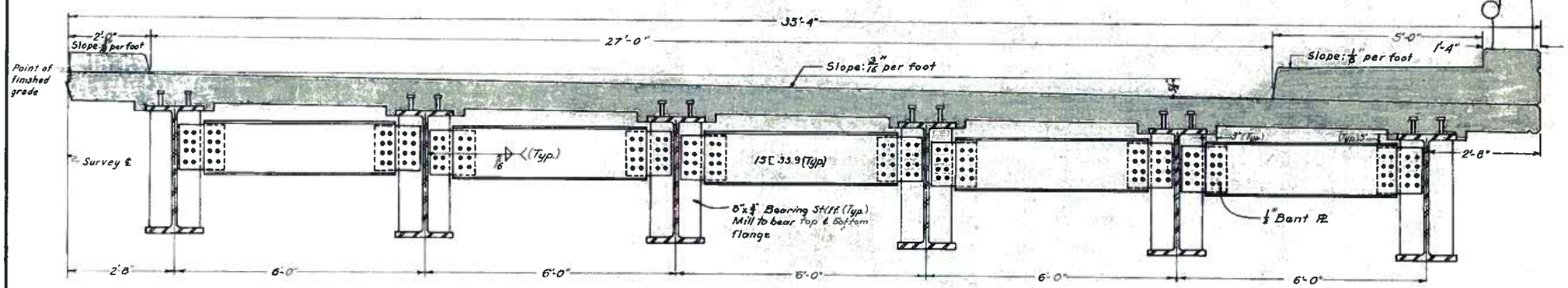

Note: All field connections and splices shall be made with ⅞" rivets or high tensile strength bolts with hardened washers.

HALF TRANSVERSE SECTION
(AT PIER 3)

Note:
Reinforcing Steel is same as shown in section above on this sheet.

CANTRELL AVE. OVER BLACKS RUN, C.&W. RWY. AND CHESAPEAKE AVE.

SUPERSTRUCTURE

Virginia Department of Highways
Office of the Bridge Engineer
Richmond, Virginia

Jan., 1970

DRAWN BY M.M.Z.
TRACED BY A.J.D.
CHECKED BY F.C.Y.

Scale: ¼"=1'-0" unless otherwise Shown

224-17
Sheet 16 of 34

PUB. RD. REGION	STATE	FEDERAL AID ROUTE	FEDERAL AID PROJECT	STATE ROUTE	STATE PROJECT	SHEET NO.	TOTAL SHEETS
2	VA.				U000-115-101, B601	7(17-34)	

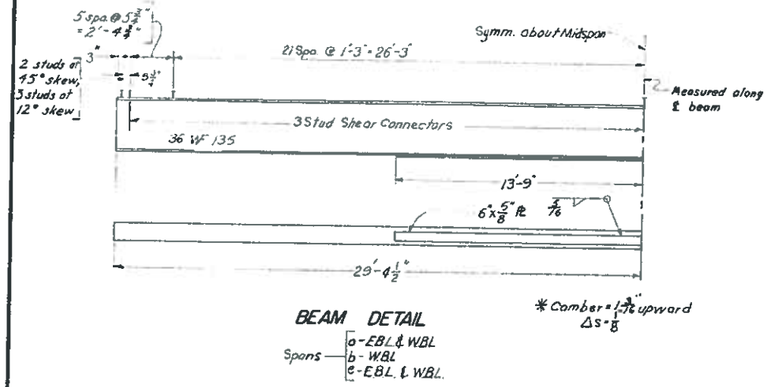

BEAM DETAIL

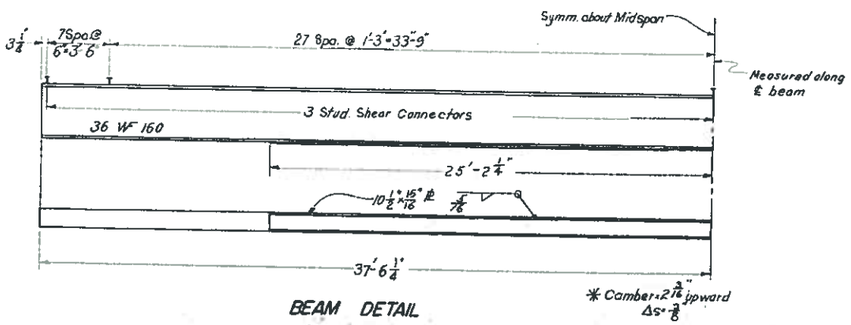

BEAM DETAIL
Span b EBL
Beam 4

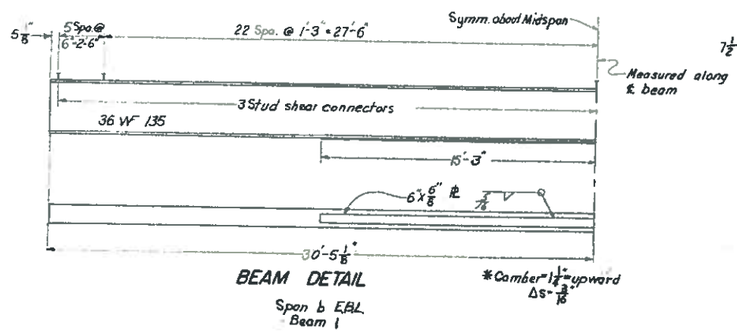

BEAM DETAIL
Span b EBL
Beam 1

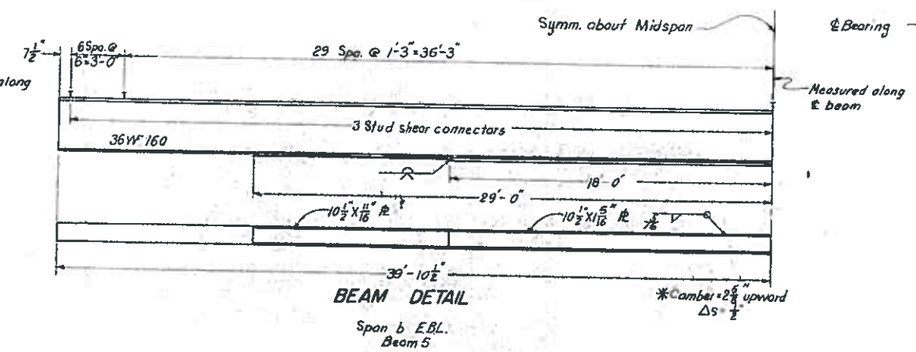

BEAM DETAIL
Span b EBL
Beam 5

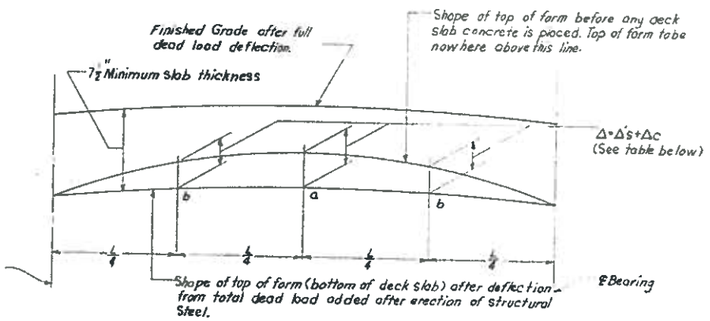

Adjustment of deck slab forms to correct for dead load deflections shall be made by varying thickness of concrete bolster between slab and beam without alteration of slab thickness. Longitudinal screed should be set above final finished grade by amounts equal to Δc.

BEAM	Dead load Deflection at a		Dead load Deflection at b	
	Δs	Δc	Δs	Δc
Span a & c, EBL & WBL	9/16"	3/16"	7/16"	1/8"
Span b, WBL	7/16"	3/16"	7/16"	1/8"
Span b, B1, EBL	7/16"	3/16"	7/16"	1/8"
Span b, B2, EBL	13/16"	1/4"	9/16"	3/16"
Span b, B3, EBL	13/16"	1/4"	7/16"	3/16"
Span b, B4, EBL	1"	5/16"	3/4"	1/4"
Span b, B4, EBL	1 1/16"	3/8"	13/16"	1/4"
Span b, B5, EBL	1 1/8"	7/16"	15/16"	5/16"
Span b, B6, EBL	1 3/16"	7/16"	1"	5/16"

Δs = Deflection of beam from dead load of concrete deck slab and bolsters.

Δc = Deflection of beam from dead load added after deck slab is cast.

DEAD LOAD DEFLECTION DIAGRAM

Not to scale

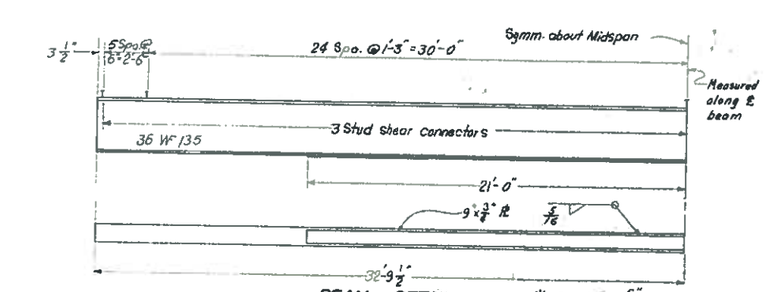

BEAM DETAIL
Span b EBL
Beam 2

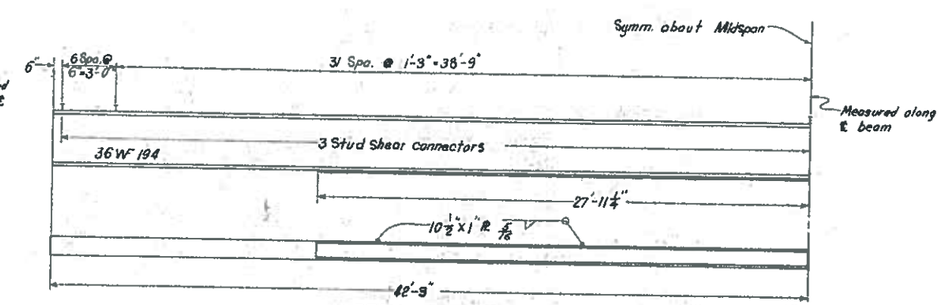

BEAM DETAIL
Span b EBL
Beam 6

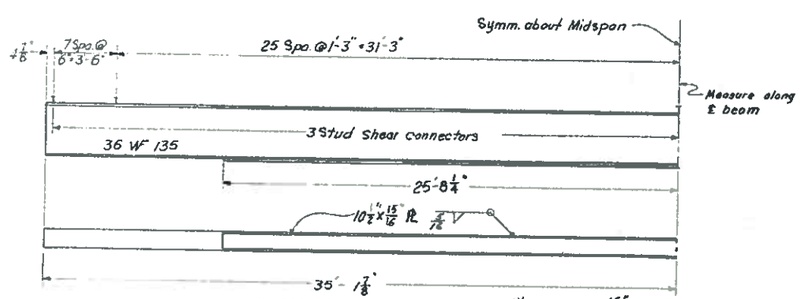

BEAM DETAIL
Span b EBL
Beam 3

* Camber note: Beams shall be cambered by the amount shown at midspan.
Δs = Computed deflection of beam from its own weight after erection, including struts, connectors, etc., at midspan.

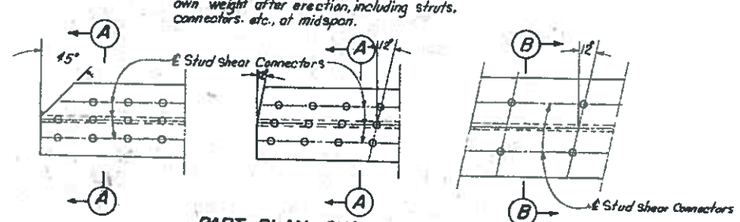

PART PLAN SHOWING STUD SHEAR CONNECTORS FOR BEAMS

Scale: 1" = 1'-0"

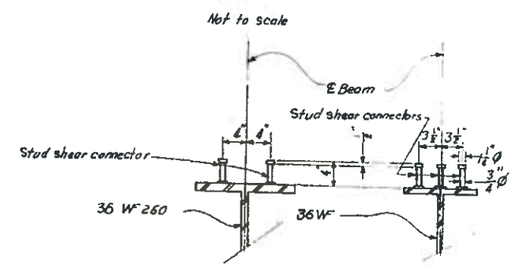

SECTION B-B
Scale: 1" = 1'-0"

SECTION A-A
Scale: 1" = 1'-0"

CANTRELL AVE. OVER BLACKS RUN, C&W. RWY. AND CHESAPEAKE AVE.

SUPERSTRUCTURE MISCELLANEOUS DETAILS

Virginia Department of Highways
Office of the Bridge Engineer
Richmond, Virginia

Jan., 1970

Drawn by C.H.T.
Traced by K.M.Z.
Checked by F.C.Y.

Scale: 1/4" = 1'-0" unless otherwise noted

224-17

Sheet 17 of 34

PUB. RD. REGION	STATE	FEDERAL AID ROUTE	FEDERAL AID PROJECT	STATE ROUTE	STATE PROJECT	SHEET NO	TOTAL SHEETS
2	VA.				U2U0-115-101, B601	7(B-34)	

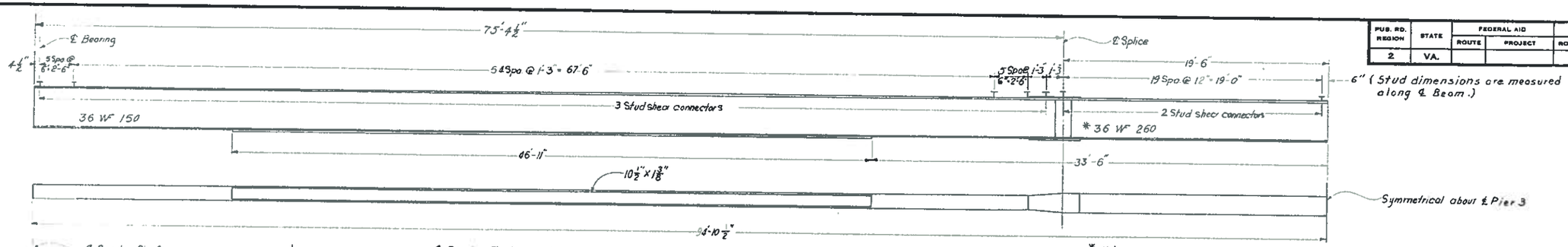

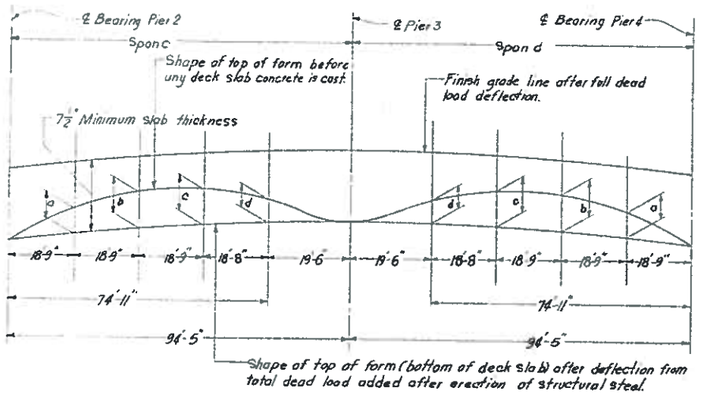

Adjustment of deck slab forms to correct for dead load deflections shall be made by varying thickness of concrete bolster between slab and beam without alteration of slab thickness. Longitudinal screed should be set above final finished grade by amounts equal to Δc.

LOCATION	Dead Load Deflection		
	Δs	Δc	Total
a	¾"	1/8"	⅞"
b	1 1/16"	5/16"	1⅜"
c	⅞"	7/16"	1 5/16"
d	5/16"	¼"	9/16"

Δs = Deflection of beam from dead load of concrete deck slab and bolsters.
Δc = Deflection of beam from dead load added after deck slab is cast.

DEAD LOAD DEFLECTION DIAGRAM

Span c & d
Not to scale

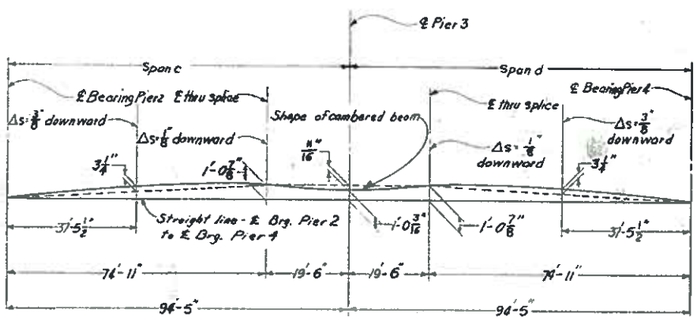

CAMBER DIAGRAM

Span c & d
Not to scale

Δs = Computed deflection of beam from its own weight after erection, including struts, connectors, etc..

BEAM DETAIL

Spans c & d E.B.L. & W.B.L.

* Note: 36 WF 260 shall be A.S.T.M. Designation A441 High Strength Low Alloy structural steel.

Note: where stud shear connectors interfere with rivets in splice plate, they shall be moved to clear.

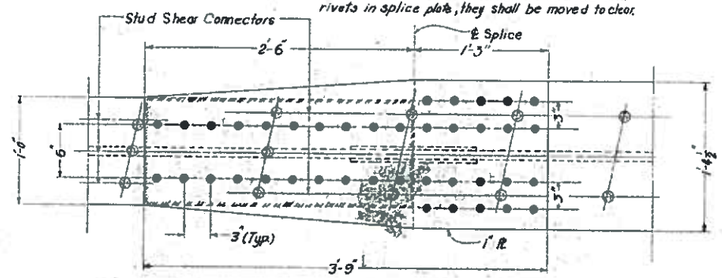

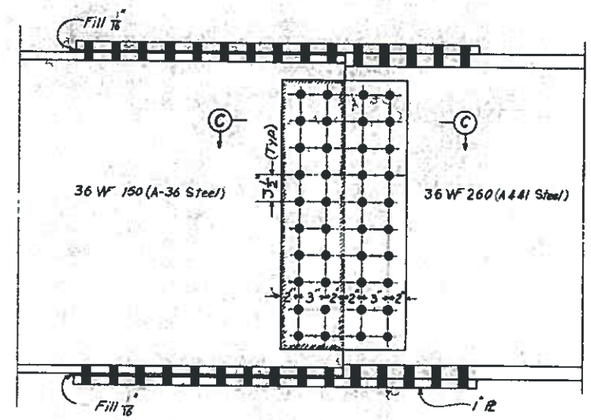

DETAIL OF SPLICE

Scale: 1½" = 1'-0"

SECTION C-C

Not to Scale

Note: A butt welded splice may be used as an alternate. Details of butt welded splice shall be submitted to the Engineer for approval.

CANTRELL AVE. OVER BLACKS RUN, C.&W. RWY. AND CHESAPEAKE AVE.

SUPERSTRUCTURE
MISCELLANEOUS DETAILS

Virginia Department of Highways
Office of the Bridge Engineer
Richmond, Virginia
Jan., 1970

224-17
Sheet 18 of 34

Drawn by C.H.T.
Traced by N.M.Z.
Checked by F.C.Y.

Scale: ¼" = 1'-0" Unless otherwise noted.

PUB. RD. REGION	STATE	FEDERAL AID ROUTE	FEDERAL AID PROJECT	STATE ROUTE	STATE PROJECT	SHEET NO.	TOTAL SHEETS
2	VA.				U000-115-101, B601	7(19-34)	

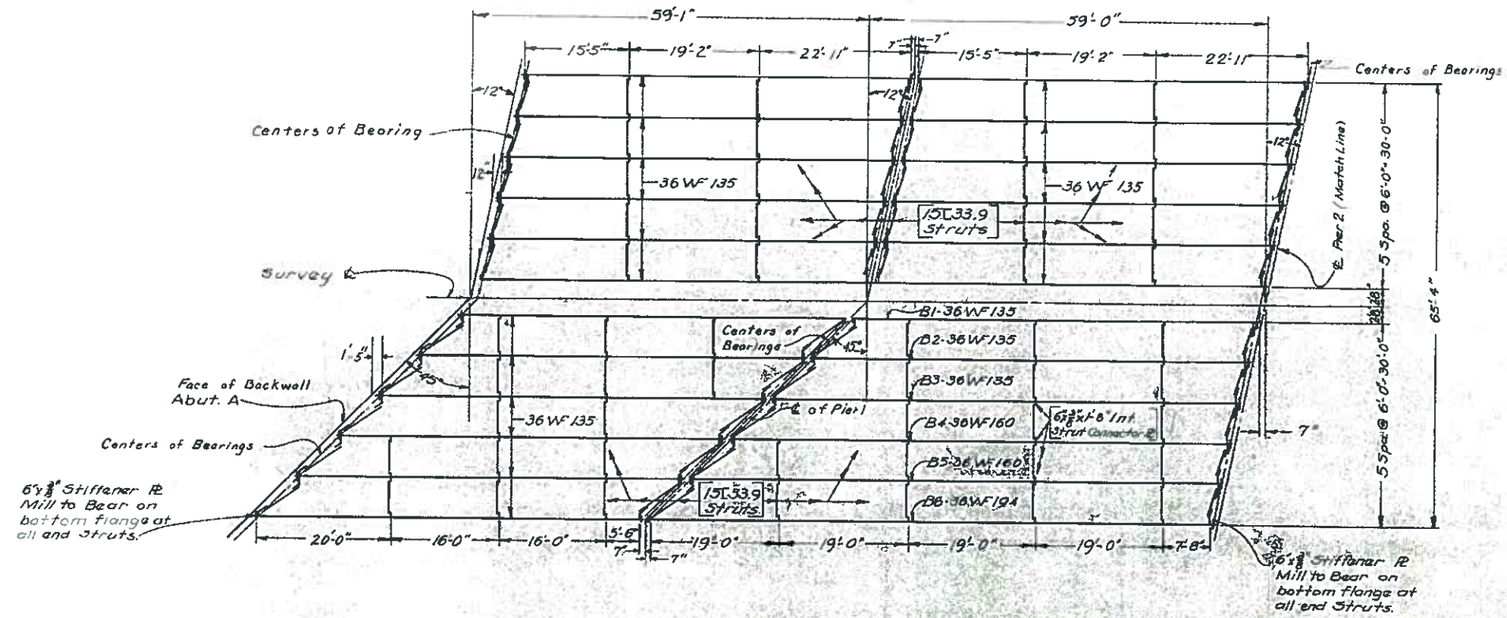

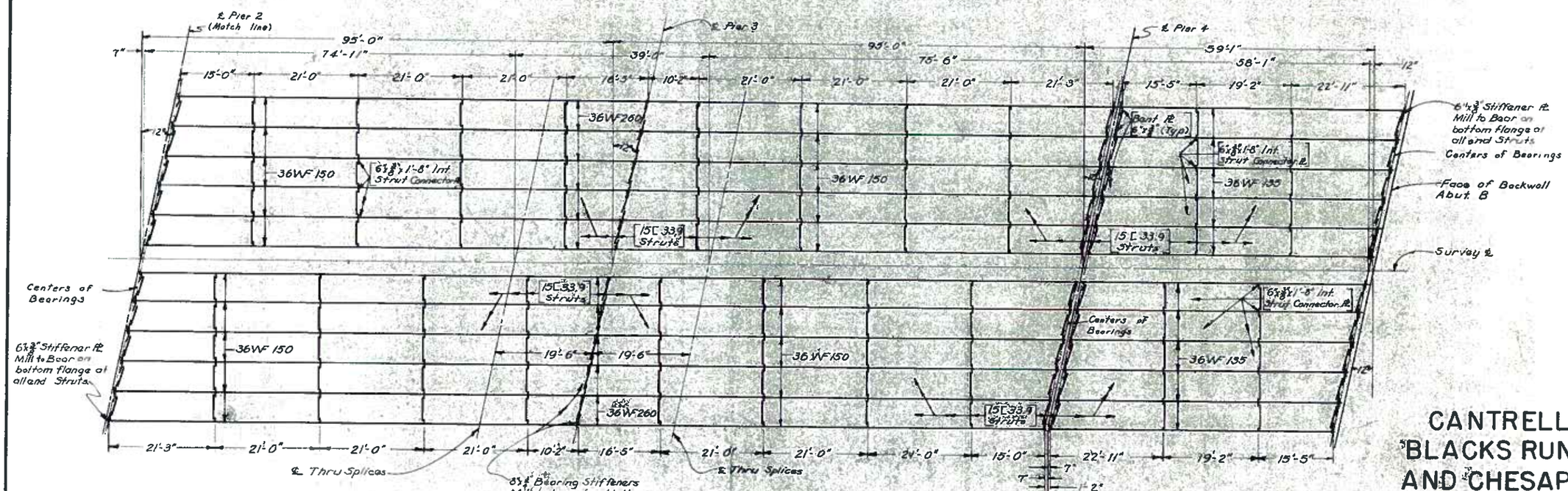

Note:
An alternate connection of end struts on 12° skew may be made by blocking the flanges of the channel and bending the web.

ERECTION DIAGRAM
Scale: 3/32" = 1'-0"

CANTRELL AVE. OVER BLACKS RUN, C.&W. RWY. AND CHESAPEAKE AVE.

ERECTION DIAGRAM

Virginia Department of Highways
Office of the Bridge Engineer
Richmond, Virginia
Jan., 1970

Drawn by C.H.T.
Traced by A.J.D.
Checked by F.C.Y.

224-17

Sheet 19 of 34

PUB. RD. REGION	STATE	FEDERAL AID ROUTE	FEDERAL AID PROJECT	STATE PE 101 ROUTE	STATE PE 101 PROJECT	SHEET NO.	TOTAL SHEETS
2	VA.				U000-115-101, B601	7(20-34)	

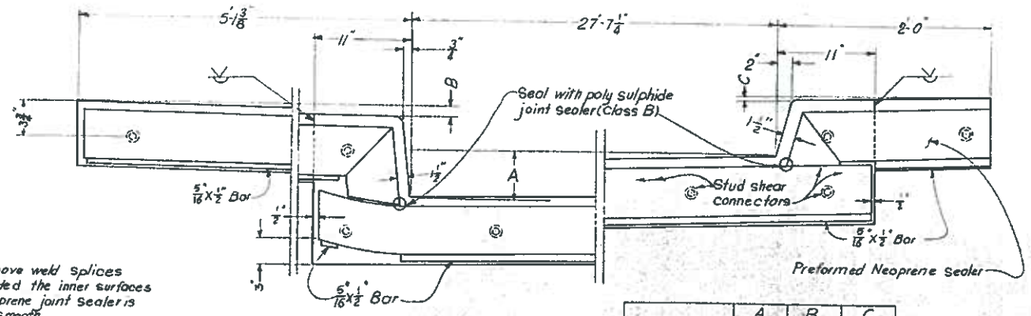

Note:
For steel plates, groove weld splices may be used, provided the inner surfaces where preformed Neoprene joint sealer is located, are ground smooth.

VIEW A-A
Scale: 1 1/2" = 1'-0"

	A	B	C
Pier 2-E.B.L.	8 3/4"	3/4"	1 3/4"
Pier 2-W.B.L.	7 1/2"	1 3/4"	3/4"
Pier 4-E.B.L.	5 3/4"	3/4"	1"
Pier 4-W.B.L.	4 5/8"	1"	7/8"

Note:
Decrease opening by 3/32" for every 10° temperature raise increase it the same amount for every 10° temperature drop

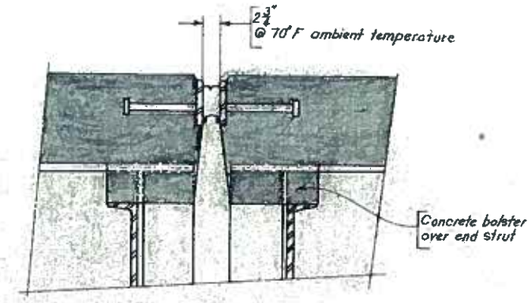

PART TYPICAL SECTION NORMAL TO PIERS 2 & 4
Scale: 1 1/2" = 1'-0"

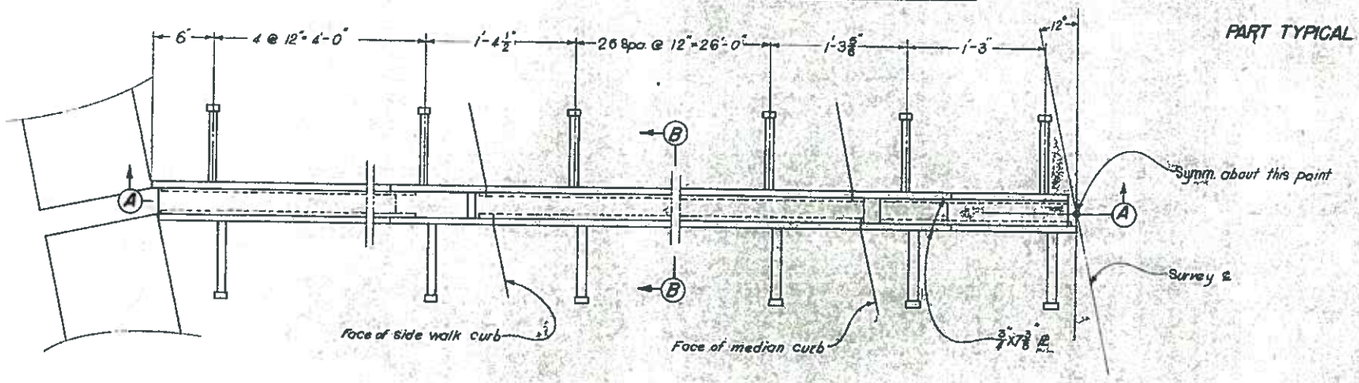

PLAN AT PIERS 2 & 4
Scale: 1 1/2" = 1'-0"

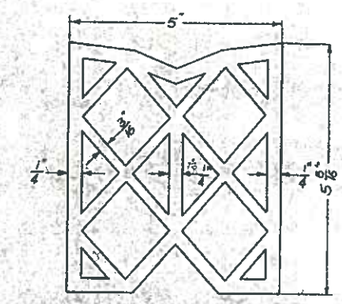

PREFORMED NEOPRENE SEAL
Not to Scale

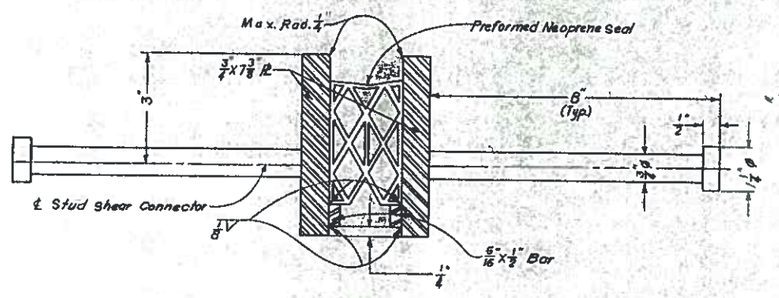

SECTION B-B
Not to Scale

CANTRELL AVE. OVER BLACKS RUN, C.&W. RWY. AND CHESAPEAKE AVE.

JOINT DETAILS AT PIERS 2 & 4

Virginia Department of Highways
Office of the Bridge Engineer
Richmond, Virginia
Jan., 1970

DRAWN BY A.J.O.
TRACED BY N.M.Z.
CHECKED BY F.C.Y.

224-17
Sheet 20 of 34

PUB. RD. REGION	STATE	FEDERAL AID ROUTE	FEDERAL AID PROJECT	STATE ROUTE	STATE PROJECT PE 101	SHEET NO.	TOTAL SHEETS
2	VA.				U000-115-101, B601	7(21-34)	

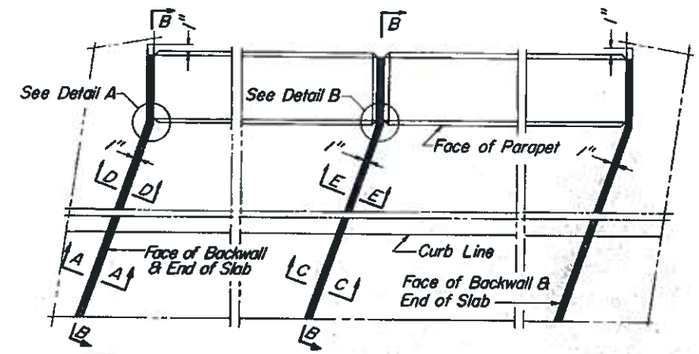

PART PLAN
Scale: 1"=1'-0"

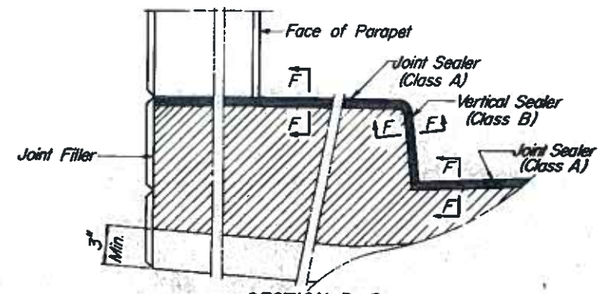

SECTION B-B
Scale: 1½"=1'-0"

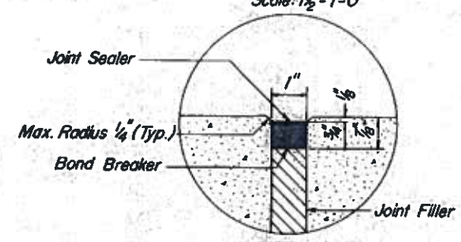

SECTION F-F
Scale: 6"=1'-0"

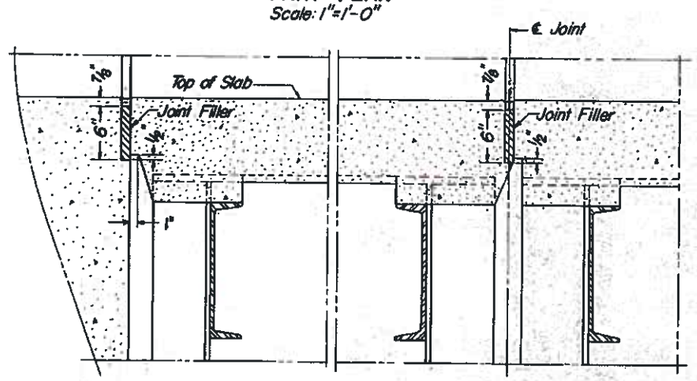

SECTION A-A
Scale: 1½"=1'-0"

SECTION C-C
Scale: 1½"=1'-0"

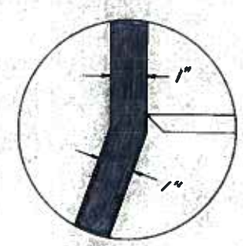

DETAIL A
Scale: 6"=1'-0"

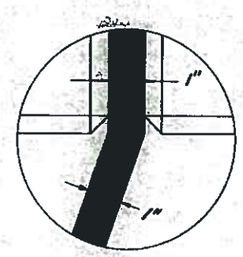

DETAIL B
Scale: 6"=1'-0"

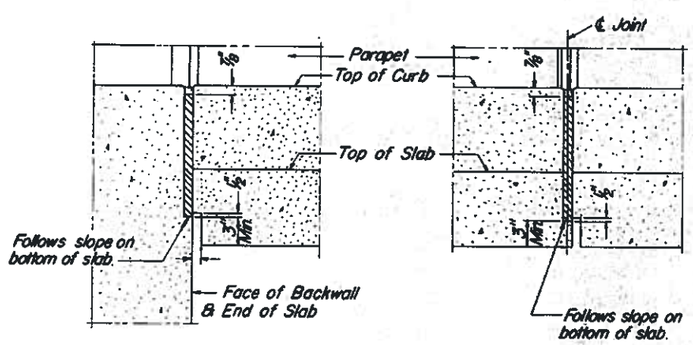

SECTION D-D
Scale: 1½"=1'-0"

SECTION E-E
Scale: 1½"=1'-0"

NOTES:

Joints shall be free of cracked and spalled areas and their faces shall be free of all foreign matter, curing compound, oils, greases, and dirt. All faces must be sand-blasted or brushed with a mechanical rotary wire brush. Just prior to sealing, the joint shall be blown out with oil-free and water-free compressed air.

A two-part polyurethane sealant meeting the requirements of Sec. 213.03 may be used in lieu of the polysulfide-base type specified.

CANTRELL AVE. OVER BLACKS RUN, C.&W. RWY. AND CHESAPEAKE AVE.

JOINT DETAILS

Virginia Department of Highways
Office of the Bridge Engineer
Richmond, Virginia
Jan., 1970

224-17

Sheet 2 of 34

BDJ-2 10-3-66

DRAWN BY: T.F.B. Jr.
TRACED BY: M.N.K.
CHECKED BY: R.A.C. Jr.

PUB. RD. REGION	STATE	FEDERAL AID ROUTE	FEDERAL AID PROJECT	ROUTE	STATE PROJECT	SHEET NO.	TOTAL SHEETS
2	VA.				PE 101 U000-115-101, B601	7(22-34)	

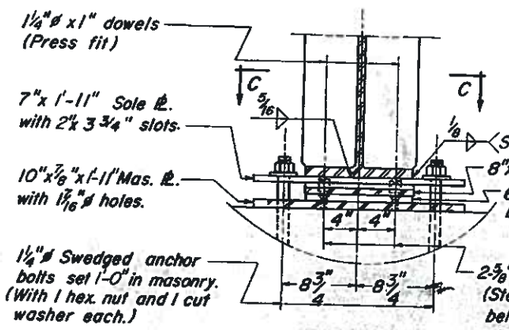

SECTION A-A
Scale: 1½"=1'-0"

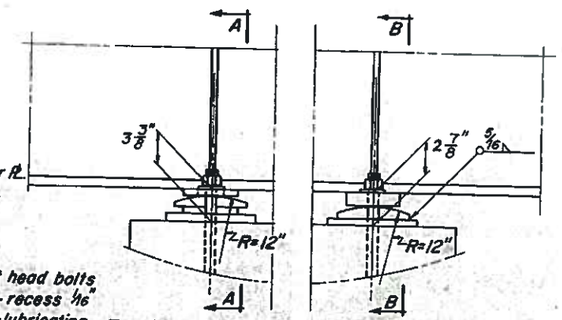

Exp. Assembly (EA-4) Fix. Assembly (FA-2)

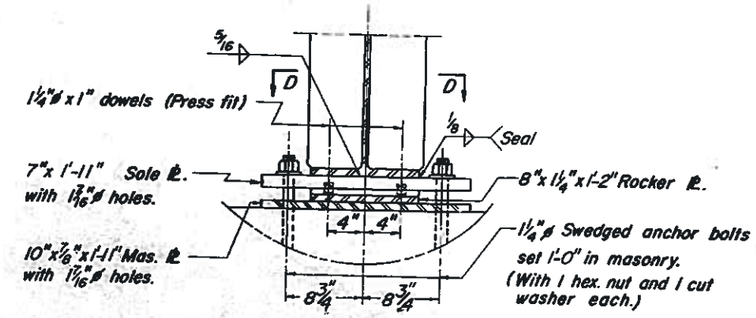

SECTION B-B
Scale: 1½"= 1'-0"

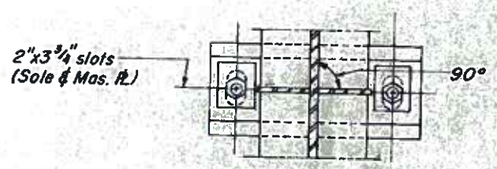

SECTION C-C

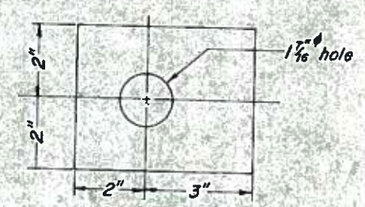

WASHER W1

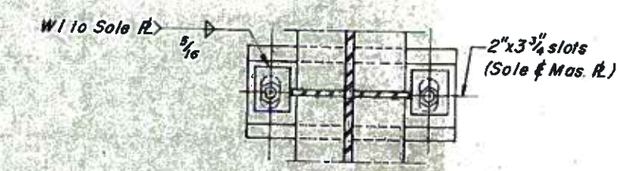

SECTION D-D

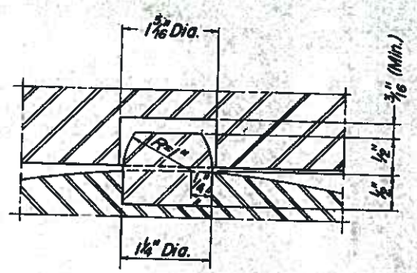

SECTION THROUGH DOWEL
Scale: Full Size

NOTE:

In addition to the current requirements of Section 237 of the Specifications, the self-lubricating bearing plates may also conform to the following specification:

"Leaded Tin Bronze conforming to the requirements of ASTM Designation B22, Alloy D modified to the extent that 1.5 to 2.5 percent lead will be required."

Washers to conform to requirements of ASA B27.2 specifications using type B regular series.

CANTRELL AVE. OVER BLACKS RUN, C.&W. RWY. AND CHESAPEAKE AVE.

BEARINGS

VIRGINIA DEPARTMENT OF HIGHWAYS
OFFICE OF THE BRIDGE ENGINEER
RICHMOND, VIRGINIA.

Jan., 1970

224-17

BLB-1 8-1-66

DRAWN BY: A.J.D.
TRACED BY: A.J.D.
CHECKED BY: F.C.Y.

PUB. RD. REGION	STATE	FEDERAL AID ROUTE	FEDERAL AID PROJECT	STATE ROUTE	STATE PROJECT	SHEET NO.	TOTAL SHEETS
2	VA.				PE 101 U000-115-101, B601	7(23-31)	

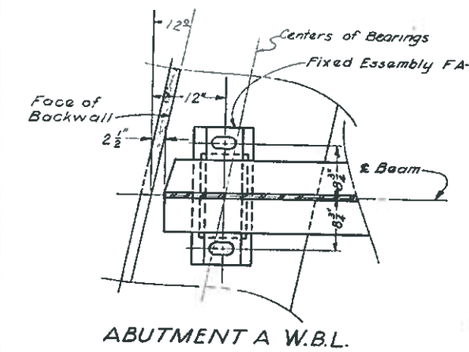

ABUTMENT A W.B.L.

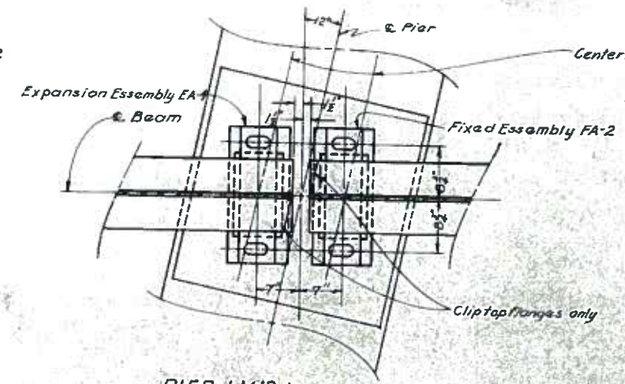

PIER 1 W.B.L.

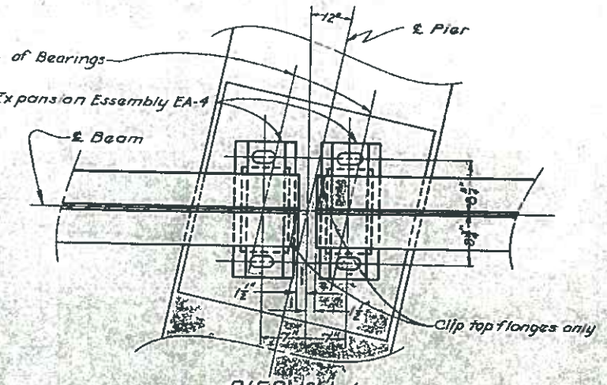

PIER 2 & 4

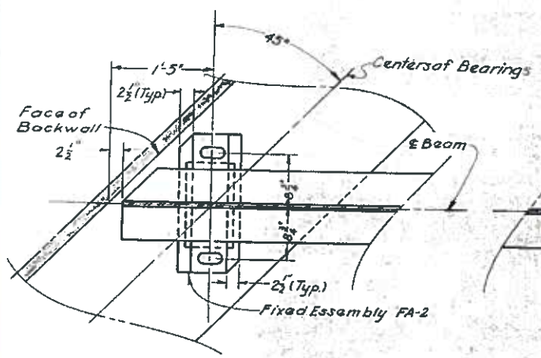

ABUTMENT A E.B.L.

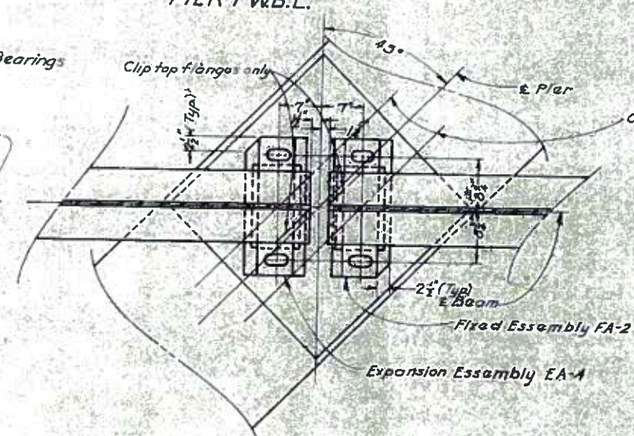

PIER 1 E.B.L.

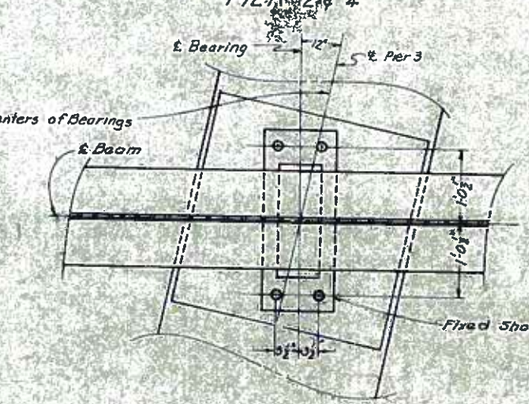

PIER 3

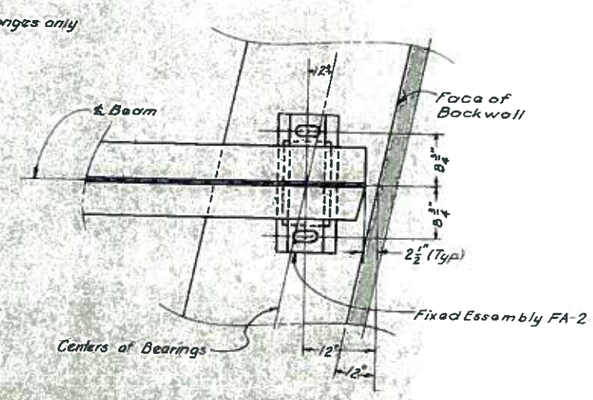

ABUTMENT B

BEARINGS LAYOUT

Scale: 1" = 1'-0"

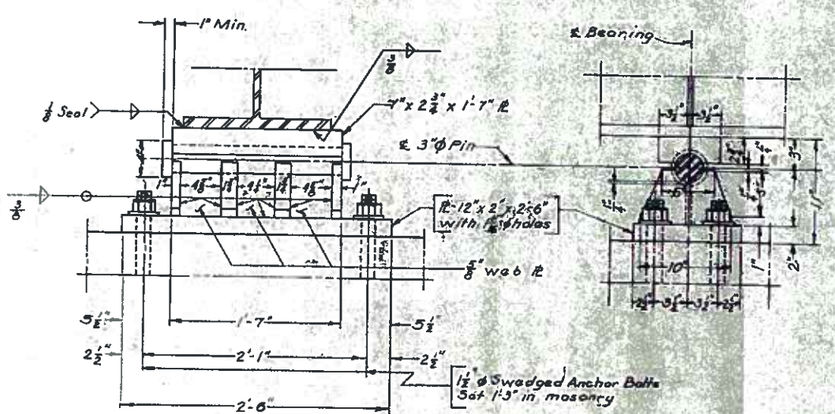

FIXED SHOE AT PIER 3

Scale: 1½" = 1'-0"

DRAWN BY A.J.D.
TRACED BY A.J.D.
CHECKED BY F.C.Y.

CANTRELL AVE. OVER BLACKS RUN, C.&W. RWY. AND CHESAPEAKE AVE.

BEARINGS

Virginia Department of Highways
Office of the Bridge Engineer
Richmond, Virginia
Jan., 1970

224-17

Sheet 23 of 34

PUB. RD. REGION	STATE	FEDERAL AID ROUTE	FEDERAL AID PROJECT	STATE ROUTE	STATE PROJECT	SHEET NO.	TOTAL SHEETS
2	VA.				U000-115-101, B601	7(24-34)	

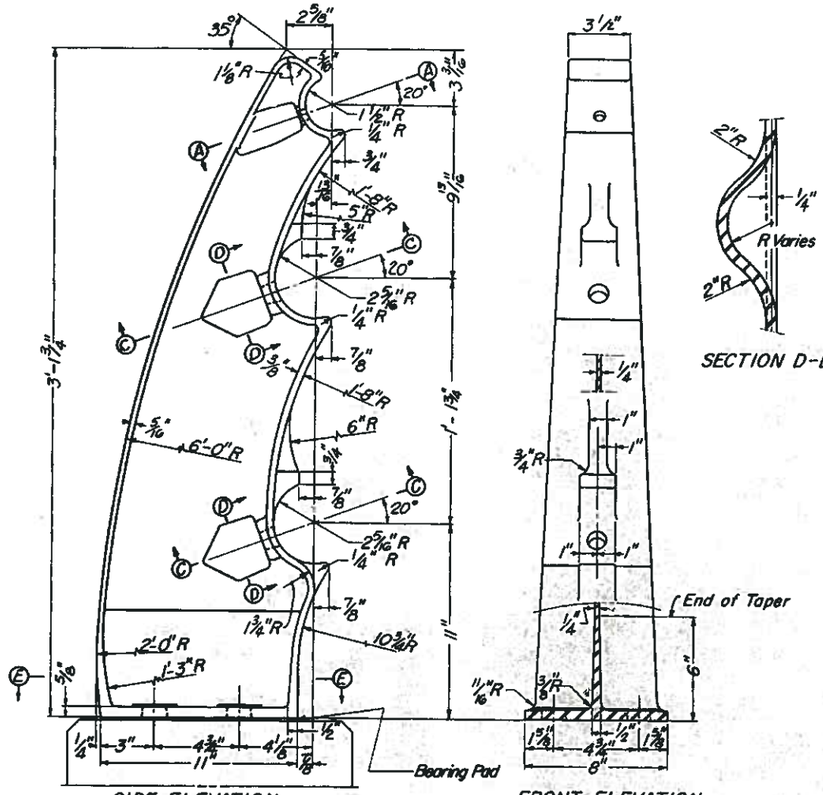

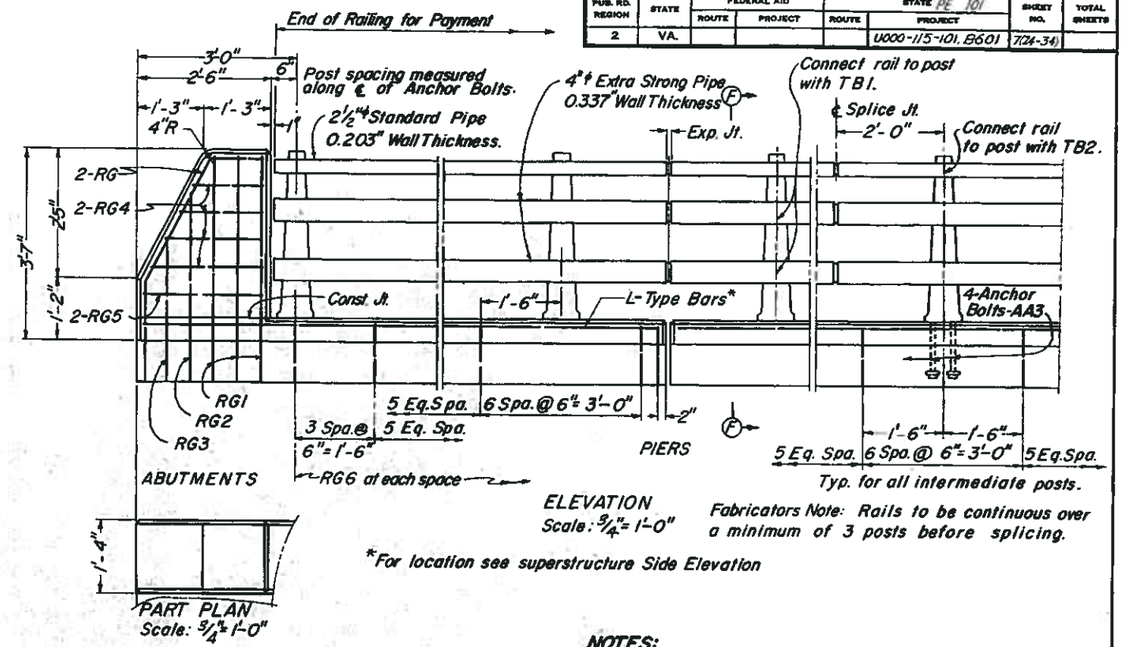

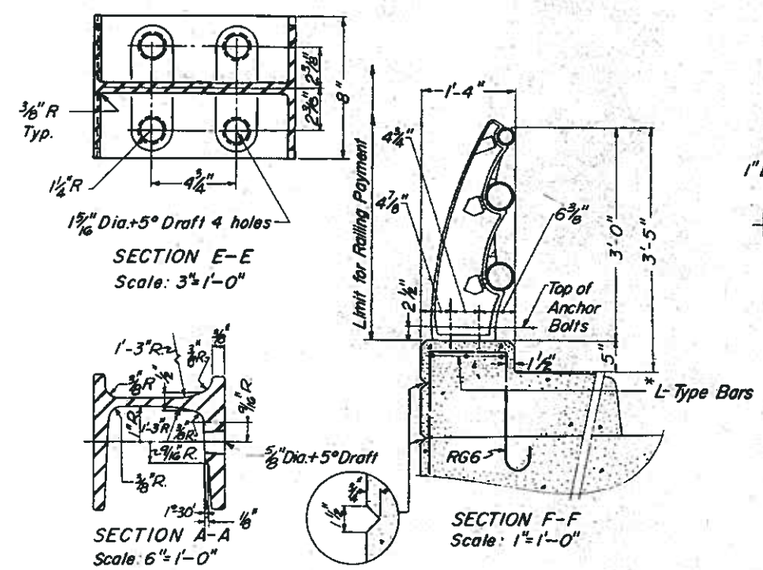

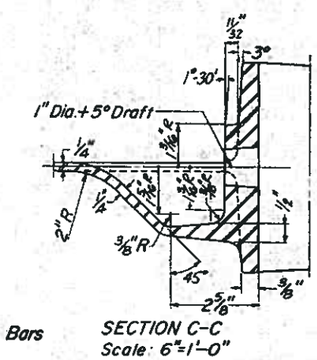

NOTES:

Posts shall be seated on neoprene bearing pads 1/16" minimum thickness, having a nominal durometer hardness of 60. Pads shall conform to post base dimensions.

Steel shims may be used for adjusting post alignment, maximum thickness of shim build-up not to exceed 1/8". Where more tilting of the post is required, the concrete area shall be ground down. Shims to be Type 2.

Posts shall be malleable iron or carbon steel casting.

Rails shall conform to the Specifications for Welded Seamless Steel Pipe, ASTM A-53, Type E or S, Grade B.

Post and Rails shall be either galvanized or painted. The rail, if painted, shall have the shop coat applied by dipping the rail section in order to coat the entire inside area. All painting shall conform to the requirement for Painting Metal Structures, Section 414.

For miscellaneous details see sheet 26.

All bevels for concrete on this sheet shall be 3/4".

Anchor bolts may be set normal to profile grade.

All of the indicated construction joints are permissible, selected to facilitate construction, and may be omitted at the contractor's option.

Bid item for railing shall include rails, rail post, bearing pads, anchor assemblies, sleeves and other associated metal parts as shown on the plans.

CANTRELL AVE. OVER BLACKS RUN, C.&W. RWY. AND CHESAPEAKE AVE.

STEEL RAILING

Virginia Department of Highways
Office of the Bridge Engineer
Richmond, Virginia
Jan., 1970

224-17

Sheet 24 of 34

BMR-14 9-3-68

DRAWN BY: P.A.C. Jr.
TRACED BY: A.E.B.
CHECKED BY: S.H.B.

PUB. RD. REGION	STATE	FEDERAL AID ROUTE	FEDERAL AID PROJECT	STATE PROJECT ROUTE	STATE PROJECT	SHEET NO.	TOTAL SHEETS
2	VA.				U000-115-101, B601	7(25-34)	

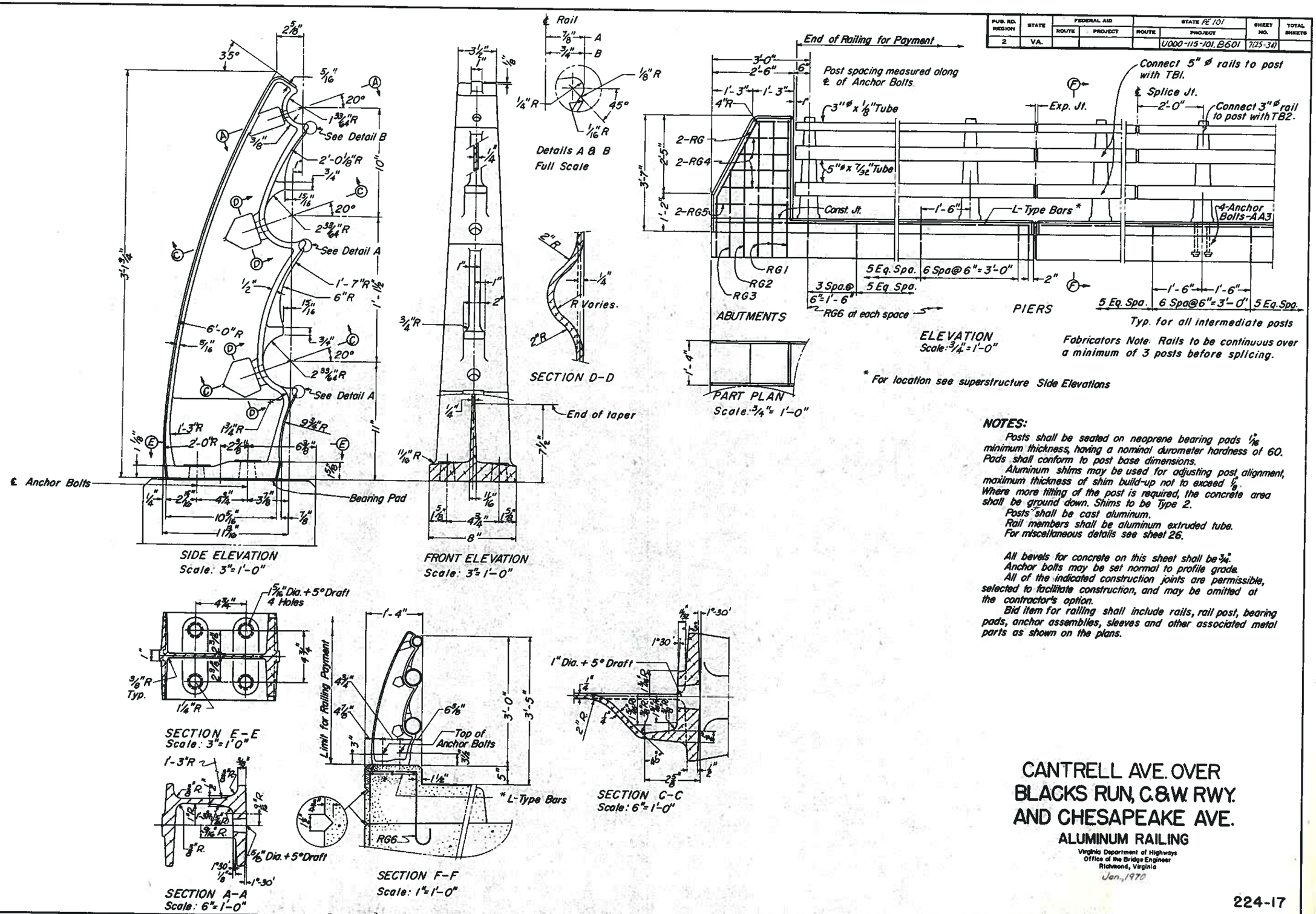

NOTES:

Posts shall be seated on neoprene bearing pads 1/16" minimum thickness, having a nominal durometer hardness of 60. Pads shall conform to post base dimensions.

Aluminum shims may be used for adjusting post alignment, maximum thickness of shim build-up not to exceed 1/8". Where more tilting of the post is required, the concrete area shall be ground down. Shims to be Type 2.

Posts shall be cast aluminum.

Rail members shall be aluminum extruded tube.

For miscellaneous details see sheet 26.

All bevels for concrete on this sheet shall be 3/4".

Anchor bolts may be set normal to profile grade.

All of the indicated construction joints are permissible, selected to facilitate construction, and may be omitted at the contractor's option.

Bid item for railing shall include rails, rail post, bearing pads, anchor assemblies, sleeves and other associated metal parts as shown on the plans.

CANTRELL AVE. OVER BLACKS RUN, C.&W. RWY. AND CHESAPEAKE AVE.

ALUMINUM RAILING

Virginia Department of Highways
Office of the Bridge Engineer
Richmond, Virginia
Jan., 1970

224-17

Sheet 25 of 34

BMR-13 9-3-68

DRAWN BY: P.A.C. Jr.
TRACED BY: BJ
CHECKED BY: SHB

PUB. RD REGION	STATE	FEDERAL AID ROUTE	FEDERAL AID PROJECT	STATE PE 101 ROUTE	STATE PE 101 PROJECT	SHEET NO	TOTAL SHEETS
2	VA.			U000	U000-115-101, B601	7(26-34)	

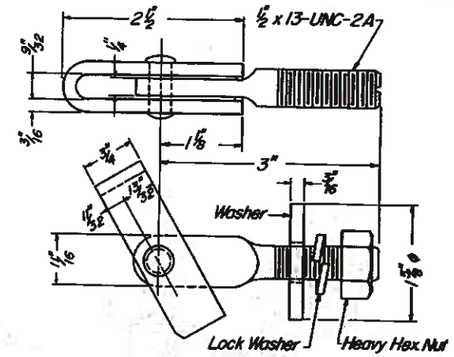

TOGGLE BOLT ASSEMBLY-TB1
TRAFFIC RAIL

Material for toggle bolt assembly TB1 shall be carbon or stainless steel having a minimum elongation of 12%. Any non stainless component to be either galvanized to ASTM-A153 or cadmium plated to ASTM-A165, Type N.S.

Required minimum tensile load to equal 9 000 lbs. when in an open position and tested thru a 1"Φ hole.

AA3 U-Type:
- Nuts (Top) --- ASTM A307; or ASTM B211 Alloy 6262-T9 or 6061-T6
- Washers ---- ASTM B209 Alloy Alclad 2024-T3 or T4
- Rods ------ ASTM A276, Type 430, 410 or 416 Annealed, Hot-Finished
- Nuts (Bottom) - ASTM A307

Threads on all rods may be rolled or cut.

Nuts and washers of like material shall be used together.

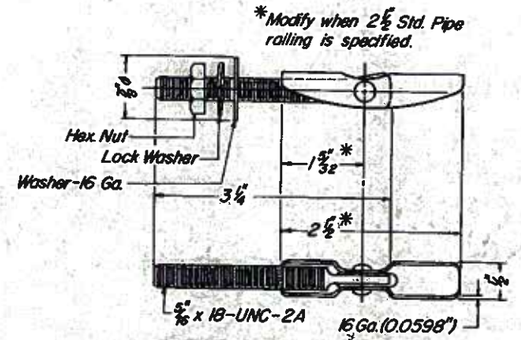

TOGGLE BOLT ASSEMBLY-TB2
PEDESTRIAN RAIL

Material for toggle bolt assembly TB2 shall be steel as follows:

Toggle bolt, nut, and washer ASTM-A108, Grade 1020 and Toggle A425. All parts to be cadmium plated to ASTM-A165.

Required minimum tensile load to equal 1 000 lbs. when in an open position and tested thru a 5/8"Φ hole.

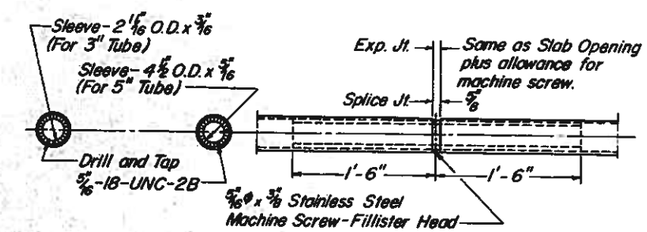

SPLICE & EXP. JOINT-ALUMINUM RAILS

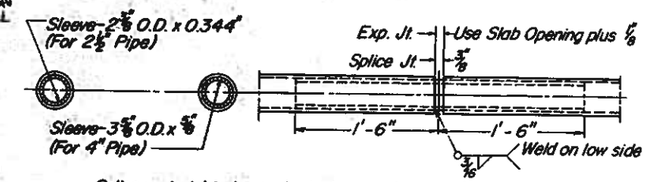

Splice material to have physical properties equal to the rails.

SPLICE & EXP. JOINT-STEEL RAILS

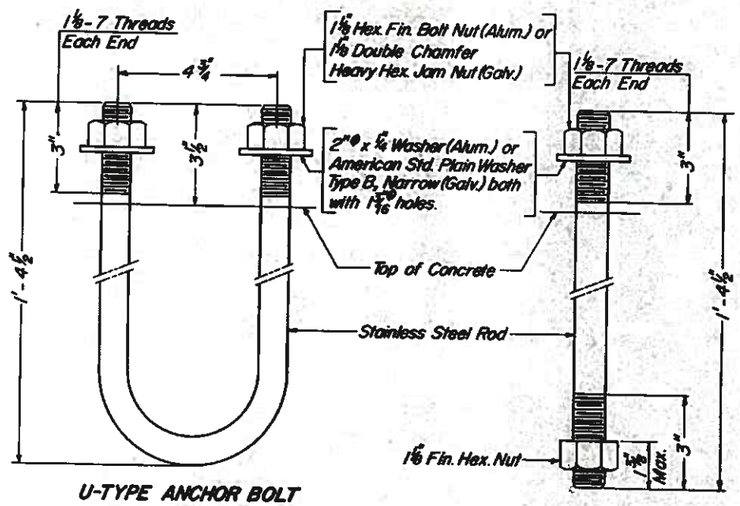

U-TYPE ANCHOR BOLT

Two U-Type Anchor Bolts may be used in place of four Anchor Bolts-AA3.

U-Type Anchor Bolts to be set normal to face of rail.

ANCHOR BOLT-AA3

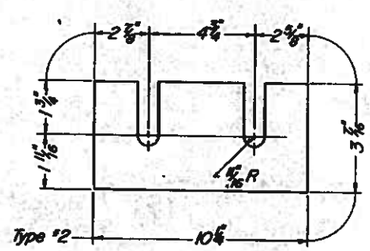

SHIM DETAIL

Shims to be made from 1/16" or 1/8" material. Shims shall not project outside of post base.

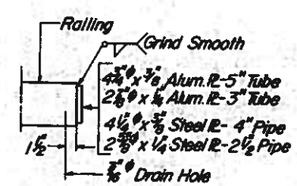

RAIL END CAP

CANTRELL AVE. OVER BLACKS RUN, C. & W. RWY. AND CHESAPEAKE AVE.

METAL RAILING MISCELLANEOUS DETAILS

Virginia Department of Highways
Office of the Bridge Engineer
Richmond, Virginia
Jan., 1970

224-17

Sheet 26 of 34

BMR-17 G & GM(A) 9-3-68

Drawn by B.R.S.
Traced by B.H.
Checked by P.R.C. Jr.

PUB. RD. REGION	STATE	FEDERAL AID ROUTE	FEDERAL AID PROJECT	STATE PE 101 ROUTE	STATE PE 101 PROJECT	SHEET NO.	TOTAL SHEETS
2	VA.				U000-115-101,B601	7(27-34)	

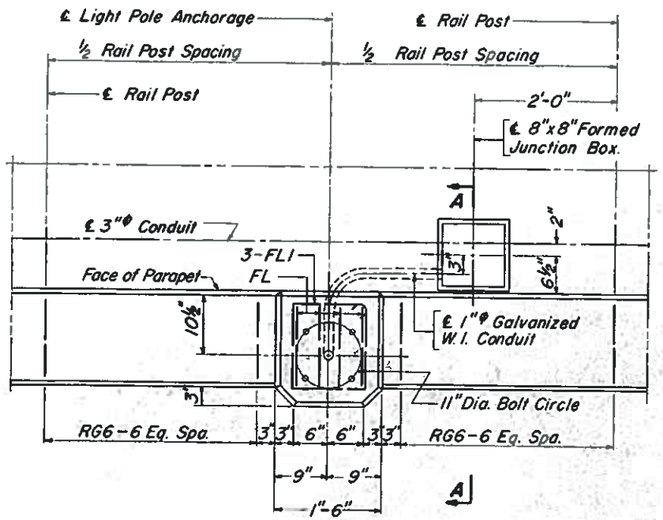

PLAN
Scale: 1"=1'-0"

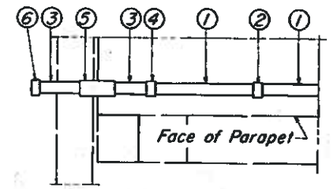

PART PLAN

1. 3"Φ Nonmetallic conduit.
2. Coupling.
3. 3"Φ Galvanized W. I. conduit
4. Adapter to connect nonmetallic conduit to metal conduit.
5. Expansion and deflection fitting.
6. 3"Φ Galvanized pipe cap.
7. Formed junction box.
8. 1"Φ Galvanized W. I. conduit.
9. Expansion fitting.

Cut longitudinal steel in sidewalk to clear junction box a minimum of 2".

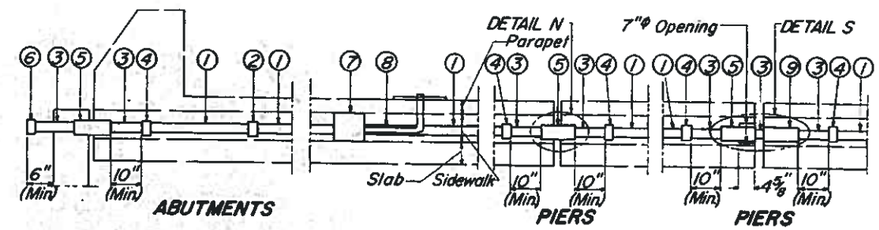

ABUTMENTS

PIERS

PIERS

CONDUIT LAYOUT
(Type G shown, similar for type GM(A))

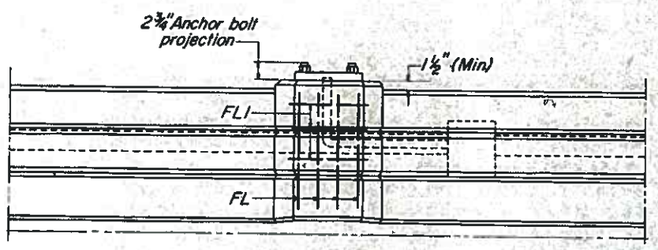

ELEVATION
Scale: 1"=1'-0"

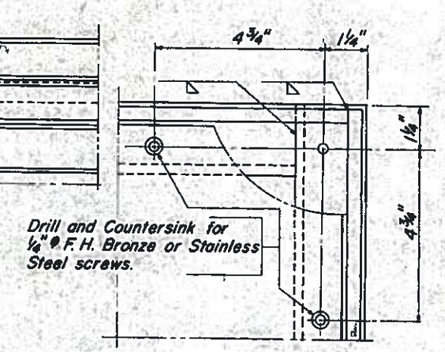

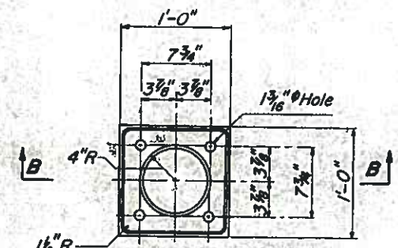

ALUMINUM COVER
Scale: 1½"=1'-0"

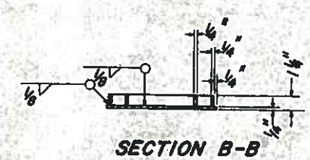

SECTION B-B
Scale: 1½"=1'-0"

NOTES:

Material for anchor bolts shall meet the same specifications and requirements as the anchor bolts for metal railing.

All bearing areas for lighting standards shall be finished to a truly level plane.

Where the longitudinal movement exceeds ¾" from normal (expansion or contraction) DETAIL S will replace DETAIL N. Close adherence to the manufacturer's requirements in regards to clearances for the installation of deflection fittings shall be observed.

Junction box frame and cover to be galvanized, after fabrication, in accordance with AASHO M-111, (ASTM A-123).

A cast aluminum cover having dimensions and properties equal to the welded cover shown may be used at contractor's option.

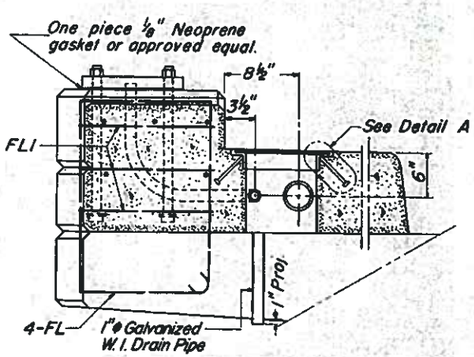

SECTION A-A
Scale: 1½"=1'-0"

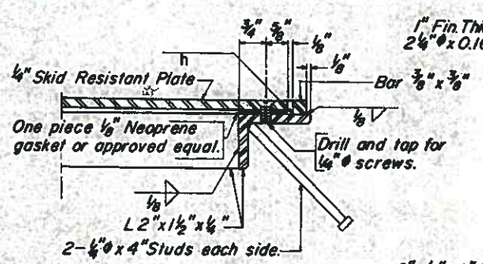

DETAIL A
Scale: 6"=1'-0"

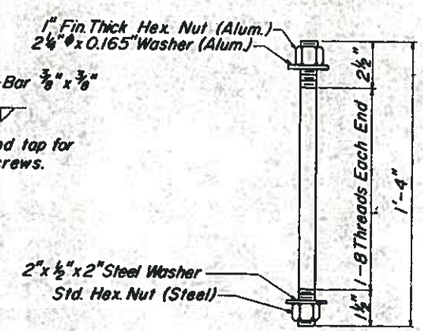

ANCHOR BOLT DETAIL
Scale: 3"=1'-0"

CANTRELL AVE. OVER BLACKS RUN, C. & W. RWY. AND CHESAPEAKE AVE.

ELECTRICAL CONDUIT SYSTEM

Virginia Department of Highways
Office of the Bridge Engineer
Richmond, Virginia

Jan., 1970

224-17

Sheet 27 of 34

BFL-6 9-3-68

DRAWN BY: R.A.C. Jr.
TRACED BY: G.A.B.
CHECKED BY: B.R.S.

PUB. RD REGION	STATE	FEDERAL AID ROUTE	FEDERAL AID PROJECT	STATE ROUTE	STATE PROJECT	SHEET NO	TOTAL SHEETS
2	VA.				U000-113-101, B601	7(28-34)	

REINFORCING STEEL SCHEDULE

MARK	NO.	SIZE (Bar #)	PIN DIA. Ft.-Inches	LENGTH Ft.-Inches		LENGTH Ft.-Inches	WEIGHT (Lbs.)	LOCATION
ABUTMENT A								
AB	2	6				35-01	105	SEATS
AB1	10	6				11-00	165	SEATS
AB2	2	6				3-11	12	SEATS
AB3	4	6		19-06	TO	37-00	170	SEATS
AF	2	8				34-05	184	FOOTING
AF1	2	8				34-11	186	FOOTING
AF2	2	8				35-10	191	FOOTING
AF3	2	8				34-07	185	FOOTING
AF4	2	8				35-05	189	FOOTING
AF5	26	6				4-06	176	FOOTING
AF6	78	4	1-05 1/2			6-11	360	FOOTING
AF7	2	8				45-09	244	FOOTING
AF8	2	8				47-02	252	FOOTING
AF9	2	8				46-01	246	FOOTING
AF10	2	8				46-10	250	FOOTING
AF11	2	8				46-06	248	FOOTING
AH	3	4	2			35-08	71	BACKWALL
AH1	3	4				35-10	72	BACKWALL
AH2	3	4				48-09	97	BACKWALL
AH3	3	4				47-10	96	BACKWALL
AH6	3	4	2			5-07	11	BACKWALL
AH5	3	4				5-09	11	BACKWALL
AH6	2	4				11	1	BACKWALL
AH7	2	4				8	1	BACKWALL
AH8	2	4				1-07	2	BACKWALL
AH9	2	4				1-05	2	BACKWALL
AH10	3	4				5-10	12	BACKWALL
AH11	3	4				5-03	10	BACKWALL
AH12	3	4		16-00	TO	26-00	42	BACKWALL
AH13	3	4				16-00	11	BACKWALL
AS	47	4	2			6-00	188	SEATS + FOOTING
AS1	11	4	2			5-09	39	SEATS + FOOTING
AS2	40	4	2	5-02	TO	7-03 3/4	167	SEATS + FOOTING
AS3	5	4	2			7-11	26	SEATS + FOOTING
AV	41	4	2	9-07	TO	12-01 1/2	297	BACKWALL
AV1	6	4	2			13-07	54	BACKWALL
AV2	3	4	2			15-07	31	BACKWALL
AV3	29	4	2			9-06	184	BACKWALL
AV4	5	4	2			14-03	48	BACKWALL
AV5	2	4	2			13-10	18	WINGWALL
AV6	2	4				8-02	11	WINGWALL
AV7	2	4				7-08	10	WINGWALL
AV8	6	4		3-05	TO	6-08 1/2	20	WINGWALL
AV9	6	4				7-07	20	WINGWALL
AV10	6	4		3-05	TO	6-08 1/2	20	WINGWALL
AW	1	4	2			6-11	5	WINGWALL
AW1	1	4	2			5-11	4	WINGWALL
AW2	2	4	2			9-11	13	WINGWALL
AW3	1	4				6-00	4	WINGWALL
AW4	1	4	2			6-02	4	WINGWALL
AW5	2	4				6-07	9	WINGWALL
AW6	2	4	2			6-07	9	WINGWALL
AW7	1	4				5-00	3	WINGWALL
AW8	1	4	2			5-02	3	WINGWALL
AW9	1	4	2			6-02	4	WINGWALL
AW10	1	4	2			6-08	4	WINGWALL
AW11	2	4	2			9-06	13	WINGWALL
AW12	1	4	2			6-06	4	WINGWALL
AW13	1	4				5-09	4	WINGWALL
AW14	2	4	2			6-10	9	WINGWALL
AW15	2	4				6-03	8	WINGWALL
AW16	1	4	2			5-06	4	WINGWALL
AW17	1	4				4-09	3	WINGWALL
AW18	6	4		3-00	TO	5-00	16	WINGWALL
AW19	6	4		2-03	TO	4-03	13	WINGWALL
TOTAL WEIGHT IN PRECEDING GROUP OF BARS							4871	
ABUTMENT B								
BB	4	4				15-07	42	SEATS
BB1	4	4				34-07	92	SEATS
BF	4	8				34-01	364	FOOTING
BF1	4	4				34-01	91	FOOTING
BF2	2	6				34-01	102	FOOTING
BF3	44	4				4-06	132	FOOTING
BF4	4	8				34-05	367	FOOTING
BF5	4	6				34-05	207	FOOTING
BF6	2	4				34-05	46	FOOTING
BF7	120	4	1-05 1/2			8-08	695	FOOTING
BH	6	4				34-07	138	BACKWALL
BH1	6	4	2			35-10	143	BACKWALL
BH2	6	4	2			5-07	22	BACKWALL
BH3	6	4				5-04	21	BACKWALL
BH4	8	4				1-01	6	BACKWALL
BS	112	4	2			5-03	394	SEATS + FOOTING
BV	58	4	2			9-04	362	BACKWALL
BV1	10	4	2			13-06	90	BACKWALL
BV2	4	4	2			13-06	36	BACKWALL
BV3	4	4				7-11	21	WINGWALLS
BV4	12	4		3-05	TO	6-05	39	WINGWALLS
BV5	4	4				7-09	21	WINGWALLS
BW	2	4	2			6-11	9	WINGWALLS
BW1	2	4	2			5-11	8	WINGWALLS
BW2	4	4	2			10-03	27	WINGWALLS
BW3	8	4		3-00	TO	6-00	24	WINGWALLS
BW4	8	4		3-02	TO	6-02	25	WINGWALLS
BW5	4	4				6-05	17	WINGWALLS
BW6	4	4				5-05	14	WINGWALLS
BW7	2	4				5-00	7	WINGWALLS
BW8	2	4				3-10	5	WINGWALLS
TOTAL WEIGHT IN PRECEDING GROUP OF BARS							3567	

DIMENSION TABLE

MARK	TYPE	A Ft.-Inches	B Ft.-Inches	C Ft.-Inches	D Ft.-Inches	E P Ft.-Inches	F Q Ft.-Inches	G R Ft.-Inches	H Ft.-Inches	I S Ft.-Inches	J T Ft.-Inches	K U Ft.-Inches	L Ft.-Inches	V Ft.-Inches	N
AB	1	35-01													
AB1	1	11-00													
AB2	1	3-11													
AB3	1	VARY													
AF	1	34-05													
AF1	1	34-11													
AF2	1	35-10													
AF3	1	34-07													
AF4	1	35-05													
AF5	1	4-06													
AF6	45	3-01 1/8	3-00 1/8												
AF7	1	45-09													
AF8	1	47-02													
AF9	1	46-01													
AF10	1	46-10													
AF11	1	46-06													
AH	2	34-05				3 5/8	1-02 5/8	1-03							
AH1	1	35-10													
AH2	1	48-09													
AH3	1	47-10													
AH4	2	4-04				3 5/8	1-02 5/8	1-03							
AH5	1	5-09													
AH6	1	11													
AH7	1	8													
AH8	1	1-07													
AH9	1	1-05													
AH10	1	5-10													
AH11	1	5-03													
AH12	1	VARY													
AH13	1	16-00													
AS	6		2-09	3-04											
AS1	6		2-09	2-07											
AS2	6		2-09 1/8	VARY											
AS3	6		2-09 1/8	5-02 7/8											
AV	7		7 5/8	VARY	4-00										
AV1	7		7 5/8	7-05	5-08 1/2										
AV2	7		7 5/8	5-07 3/8	5-06 1/8										
AV3	7		7 5/8	5-08 1/4	3-04 1/4										
AV4	7		7 5/8	8-00 7/8	5-08 5/8										
AV5	7		7 5/8	7-08 7/8	3-07 5/8										
AV6	1	8-02													
AV7	1	7-08													
AV8	1	VARY													
AV9	1	7-07													
AV10	1	VARY													
AW	2	4-01 1/8				1-03 5/8	2-06 3/8	2-10							
AW1	2	4-01 1/8				10 1/4	1-07 3/4	1-10							
AW2	3	5-09				1-08 7/8	1-08 1/2	2-05		1-03 1/2	1-03 1/4	1-09 1/2			
AW3	1	6-00													
AW4	2	4-11				3 5/8	1-02 5/8	1-03							
AW5	1	6-07													
AW6	2	5-04				3 5/8	1-02 5/8	1-03							
AW7	1	5-00													
AW8	2	5-11				3 5/8	1-02 5/8	1-03							
AW9	2	4-00 1/8				1-00	1-11 1/4	2-02							
AW10	2	4-00 1/8				1-02 9/4	2-04 5/8	2-08							
AW11	3	6-06				11	10 5/8	1-03		1-03 1/2	1-03 1/4	1-09 1/2			
AW12	2	5-03 1/4				11	10 5/8	1-03							
AW13	1	5-09													
AW14	2	5-07 1/4				11	10 5/8	1-03							
AW15	1	6-03													
AW16	2	4-03 1/4				11	10 5/8	1-03							
AW17	1	4-09													
AW18	1	VARY													
AW19	1	VARY													
BB	1	15-07													
BB1	1	34-07													
BF	1	34-01													
BF1	1	34-01													
BF2	1	34-01													
BF3	1	4-06													
BF4	1	34-05													
BF5	1	34-05													
BF6	1	34-05													
BF7	45	3-11 1/2	3-10 3/4												
BH	1	34-07													
BH1	2	34-07				3 5/8	1-02 5/8	1-03							
BH2	2	4-04				3 5/8	1-02 5/8	1-03							
BH3	1	5-04													
BH4	1	1-01													
BS	6		2-09 1/2	2-06 1/2											
BV	7		7 5/8	5-00 1/2	3-10										
BV1	7		7 5/8	7-03 1/2	5-09										
BV2	7		7 5/8	7-07	5-05 1/2										
BV3	1	7-11													
BV4	1	VARY													
BV5	1	7-09													
BW	2	4-01 1/8				1-03 5/8	2-06 3/8	2-10							
BW1	2	4-01 1/8				10 1/4	1-07 3/4	1-10							
BW2	3	6-04				1-06 3/4	1-06 3/8	2-02		1-03 1/2	1-03 1/4	1-09 1/2			
BW3	1	VARY													
BW4	1	VARY													
BW5	1	6-05													
BW6	1	5-05													
BW7	1	5-00													
BW8	1	3-10													

BENDING DIAGRAM

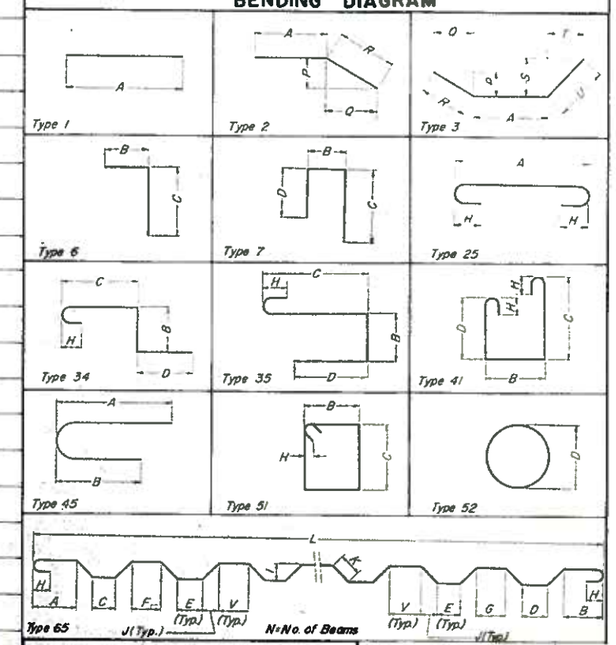

DIMENSION VARIATION TABLE

Mark	No. Ea. Len.	Dimension	From Ft.-Inches	To Ft.-Inches	Vary By Ft.-Inches
AB3	1	A	19-06	37-00	17-06
AH12	1	A	16-00	26-00	5-00
AS2	10	C	2-03 7/8	4-07 5/8	6 1/8
AV	1	C	3-01 1/2	9-08	5 3/4
AV8	2	A	3-05	6-08 1/2	1-06
AV10	2	A	3-05	6-08 1/2	1-06
AW18	2	A	3-00	5-00	1-00
AW19	2	A	2-03	4-03	1-00
BV4	4	A	3-05	6-05	1-06
BW3	2	A	3-00	6-00	1-00
BW4	2	A	3-02	6-02	1-00
PS1	2	C	3-04 3/4	4-01 3/4	1
PS3	8	C	3-04 3/4	4-01 3/4	3/4
PS4	2	C	3-05 1/4	4-02	1 1/8
PS6	4	C	3-06 7/8	4-04 7/8	1
CS2	2	A	1-01	3-09	1-02
CS3	1	A	1-09	3-11	1-00
L1	3	A	20-05	28-00 1/2	2 7/8
L3	3	A	20-04	29-02	9
L4	3	A	27-07	39-03	4
L6	3	A	19-04	28-04	4
SC4	8	A	1-04	2-01	9
SC2	4	A	1-00	34-10 1/2	9
SC3	2	A	9	33-07 1/2	8-08 7/8
SC4	2	A	1-00	33-08	7

Note Dimensions in bending diagram are out-to-out of bars

CANTRELL AVE. OVER BLACKS RUN, C.&W. RWY. AND CHESAPEAKE AVE.

REINFORCING STEEL

Virginia Department of Highways
Office of the Bridge Engineer
Richmond, Virginia
Jan. 1970

224-17

Sheet 2 of 34

CHECKED BY E.C.V. DRAWN BY T.W.L.

PUB. RD REGION	STATE	FEDERAL AID ROUTE	FEDERAL AID PROJECT	STATE ROUTE	STATE PROJECT	SHEET NO.	TOTAL SHEETS
2	VA.				U000-115-101, B601	7(29-34)	

REINFORCING STEEL SCHEDULE

MARK	NO.	SIZE (Bar #)	PIN DIA Ft.-Inches	LENGTH Ft.-Inches		LENGTH Ft.-Inches	WEIGHT (Lbs.)	LOCATION
SUPERSTRUCTURE								
CS	133	4	2			8-06	757	SIDEWALK
CS1	620	4	2			8-06	3529	SIDEWALK
CS2	10	4		1-01	TO	5-09	23	SIDEWALK
CS3	5	4		1-09	TO	5-11	13	SIDEWALK
ES	90	4	2			3-10	230	END BOL SPAN A+B EBL
ET	24	4				25-04	406	END BOL SPAN A+B EBL
FL	24	5	3 3/4			5-06	138	LIGHT POLE BASE
FL1	18	5	3 3/4			5-00	94	LIGHT POLE BASE
L	510	4				29-11	10192	SPAN A+B+E EAST+WEST
L	510	4				29-11	10192	SPAN A+B+E EAST+WEST
L1	37	4		20-05	TO	29-00 1/2	611	TRAP SPAN TOP BARS
L2	612	4				32-09	13388	SPAN C+D EAST + WEST
L2	612	4				32-09	13388	BOUND LANES
L3	53	4		20-04	TO	29-02	876	TRAP SPAN BOTTOM
L4	6	4		27-07	TO	29-03	114	TRAP SPAN SIDEWALK
L5	9	4				29-03	176	TRAP SPAN RAILING
L6	3	4		19-04	TO	20-04	40	TRAP SPAN MEDIAN
M	117	4	2			3-06	274	SPAN A+B EASTBOUND
M1	620	4	2			3-06	1450	SPAN A,B,C,D+E EASTWEST
RG	8	4	2			5-11	32	4-RAILING END POST
RG1	12	4	2			10-03	82	4-RAILING END POST
RG2	4	4	2			8-09	23	4-RAILING END POST
RG3	4	4	2			7-03	19	4-RAILING END POST
RG4	32	4		1-04	TO	2-01	37	4-RAILING END POST
RG5	8	4				2-03	12	4-RAILING END POST
RG6	554	5	3 3/4			4-07	2642	PARAPET
RG6	554	5	3 3/4			4-07	2642	PARAPET
SB	524	5	3 3/4			38-01	20808	SLAB
SB1	65	5	3 3/4			37-03	2526	SLAB
SC	532	5	3 3/4			36-10	20438	SLAB TOP
SC	532	5	3 3/4			36-10	20438	SLAB BOTTOM
SC1	134	5	3 3/4			36-00	5043	SLAB TOP + BOTTOM
SC2	254	5	3 3/4	2-02	TO	36-10 1/2	4897	SLAB TOP + BOTTOM
SC3	26	5	3 3/4	1-11	TO	34-09 1/2	498	SLAB TOP + BOTTOM
SC4	114	5	3 3/4	2-02	TO	34-10	2269	SLAB TOP + BOTTOM
TOTAL WEIGHT IN PRECEDING GROUP OF BARS							156697	
PIERS								
PB	2	3GA				390-05	124	PIER 1 WBL STEM
PB1	3	3GA				422-04	199	PIER 1 EBL STEM
PB2	4	3GA				382-05	242	PIER 2 STEM
PB3	4	3GA				414-04	263	PIER 3 STEM
PB4	4	3GA				430-03	273	PIER 4 STEM
PC	7	9	9			37-04	888	PIER 1 WBL CAP
PC1	4	10				29-07	509	PIER 3 CAP
PC2	4	8	8			37-01	396	PIER 1 WBL CAP
PC3	4	4				34-10	93	PIER 1 WBL CAP
PC4	4	9	9			34-11	475	PIER 1 WBL CAP
PC5	3	10				29-01	375	PIER 1 WBL CAP
PC6	3	10	10			51-01	659	PIER 1 EBL CAP
PC7	3	9	9			50-10	518	PIER 1 EBL CAP
PC8	8	4				24-10	135	PIER 1 EBL CAP
PC9	2	8				44-04	237	PIER 1 EBL CAP
PC10	4	8	8			48-09	520	PIER 1 EBL CAP
PC11	21	10	10			38-01	3445	PIER 2+4 CAP
PC12	13	9	9			37-10	1672	PIER 2+4 CAP
PC13	16	4				35-04	378	PIER 2+4 CAP
PC14	12	8				29-07	948	PIER 2+4 CAP
PC15	16	9	9			35-05	1928	PIER 2+4 CAP
PC16	24	11	11			38-05	4805	PIER 3 CAP
PC17	8	5				35-05	295	PIER 3 CAP
PC18	4	12				29-07	509	PIER 3 CAP
PC19	8	10	10			35-06	1222	PIER 3 CAP
PC20	7	8	8			37-07	702	PIER 2 CAP
PF	18	5				5-04	100	FOOTINGS PIER 1 WBL
PF1	16	8	4 1/2			7-09	186	FOOTINGS PIER 1 WBL
PF2	64	10	10			12-01	3328	FOOTINGS PIER 2+4
PF3	152	6				4-04	989	FOOTINGS PIER 2+4
PF4	48	10	10			14-06	2397	FOOTINGS PIER 3
PF5	96	6				4-04	622	FOOTINGS PIER 3
PS	24	5	2-07 1/4			10-00	360	PIER 1 THRU 4
PS1	16	4	2	11-01	TO	12-07	142	PIER 1 WBL
PS2	666	4	2			12-07	5607	PIER 1,2+4
PS3	104	4	2	11-01	TO	13-07	821	PIER 2+4
PS4	18	4	2	11-00	TO	12-05 1/2	141	PIER 1 EBL
PS5	208	5	3 3/4			13-03	2874	PIER 3
PS6	45	5	3 3/4	11-06	TO	13-02	514	PIER 3
PV	130	9				6-00	2652	STEMS PIER 1, 2+4
PV1	20	9				27-08	1881	STEMS PIER 1 WBL
PV2	30	9				29-07	3018	STEMS PIER 1 EBL
PV3	40	9				27-02	3694	STEMS PIER 2
PV4	40	9				30-02	4152	STEMS PIER 4
PV5	40	9				29-05	4000	STEMS PIER 3
PV6	40	9				5-08	771	STEMS PIER 3
TOTAL WEIGHT IN PRECEDING GROUP OF BARS							60700	

DIMENSION TABLE

MARK	TYPE	A Ft.-Inches	B Ft.-Inches	C Ft.-Inches	D Ft.-Inches	E P Ft.-Inches	F Q Ft.-Inches	G R Ft.-Inches	H Ft.-Inches	I S Ft.-Inches	J T Ft.-Inches	K U Ft.-Inches	L Ft.-Inches	V Ft.-Inches	N
CS	34		1-01 1/8	5-11 1/4	1-02 3/4				4						
CS1	34		1-01 1/8	5-11 1/4	1-02 3/4				4						
CS2	1	VARY													
CS3	1	VARY													
ES	7		8 1/8	3-00	4										
ET	1	25-04													
FL	51		1-00 7/8	1-04					3 7/8						
FL1	51		1-00 1/2	1-01 1/2					3 7/8						
L	1	29-11													
L	1	29-11													
L1	1	VARY													
L2	1	32-09													
L2	1	32-09													
L3	1	VARY													
L4	1	VARY													
L5	1	29-03													
L6	1	VARY													
M	41		1-06 1/2	7 7/8	7 7/8				4						
M1	41		1-06 1/2	7 7/8	7 7/8				4						
RG	3	2-08 1/8				10 7/8	5 1/2	1-00		1-01 1/8	2-00 3/8	2-03 1/2			
RG1	7		1-01 1/8	4-08	4-08										
RG2	7		1-01 1/8	3-11	3-11										
RG3	7		1-01 1/8	3-02	3-02										
RG4	1	VARY													
RG5	1	2-03													
RG6	35		1-01	1-07 1/8	1-07 1/8				5						
RG6	35		1-01	1-07 1/8	1-07 1/8				5						
SB	65	3-09 3/4	3-09 3/4	3-01 1/4	3-01 1/4	3-01 5/8	2-04 7/8	2-04 7/8	5	4 3/8	3 1/2	5 5/8	35-09 3/8	2-05	6
SB1	65	3-08 3/8	3-08 1/2	3-00 5/8	3-00 3/8	3-00 3/4	2-04 1/8	2-04 1/8	5	4 3/8	3 1/2	5 5/8	35-00	2-04 1/4	6
SC	25	35-08							5						
SC	25	35-08							5						
SC1	25	34-11							5						
SC2	25	VARY							5						
SC3	25	VARY							5						
SC4	25	VARY							5						
PB	52				2-06 5/8										
PB1	52				2-06 5/8										
PB2	52				2-06 5/8										
PB3	52				2-06 5/8										
PB4	52				2-06 5/8										
PC	25	34-10 1/2													
PC1	1	29-07							10 1/8						
PC2	25	34-10 3/4													
PC3	1	34-10							9						
PC4	2	29-00 5/8				9 1/2	5-10	5-10 1/2							
PC5	1	29-01													
PC6	25	48-04 1/8							11 1/4						
PC7	25	48-04 1/2							10 1/8						
PC8	1	24-10													
PC9	1	44-04													
PC10	2	44-04 1/2				9	4-04	4-04 5/8							
PC11	25	35-04 1/8													
PC12	25	35-04 1/2							11 1/4						
PC13	1	35-04							10 1/8						
PC14	1	29-07													
PC15	2	29-06 5/8				9 1/2	5-10	5-10 1/2							
PC16	25	35-04 7/8													
PC17	1	35-05							1-00 3/8						
PC18	1	29-07													
PC19	2	29-07 5/8				10	5-10	5-10 1/2							
PC20	25	35-04 3/4													
PF	1	5-04							9						
PF1	25	6-04 1/2													
PF2	25	9-04 1/8							6						
PF3	1	4-04							11 1/4						
PF4	25	11-09 1/8													
PF5	1	4-04							11 1/4						
PS	45	4-05 1/2	4-05												
PS1	51		1-10 7/8	VARY											
PS2	51		1-10 6/8	14-02					2 7/8						
PS3	51		1-10 7/8	VARY					2 7/8						
PS4	51		1-09 7/8	VARY					2 7/8						
PS5	51		1-10 1/8	4-05 1/4					3 7/8						
PS6	51		1-10	VARY					3 7/8						
PV	1	6-00													
PV1	1	27-08													
PV2	1	29-07													
PV3	1	27-02													
PV4	1	30-02													
PV5	1	29-05													
PV6	1	5-08													

CHECKED BY F.C.Y. DRAWN BY T.K.L.

GANTRELL AVE. OVER BLACKS RUN, C.&W. RWY. AND CHESAPEAKE AVE.

REINFORCING STEEL

Virginia Department of Highways
Office of the Bridge Engineer
Richmond, Virginia
Jan., 1970

224-17

Sheet 29 of 34

PUB. RD. REGION	STATE	FEDERAL AID ROUTE	FEDERAL AID PROJECT	STATE PE-101 ROUTE	STATE PE-101 PROJECT	SHEET NO.	TOTAL SHEETS
2	VA.				U000-115-101, B601	7(30-34)	

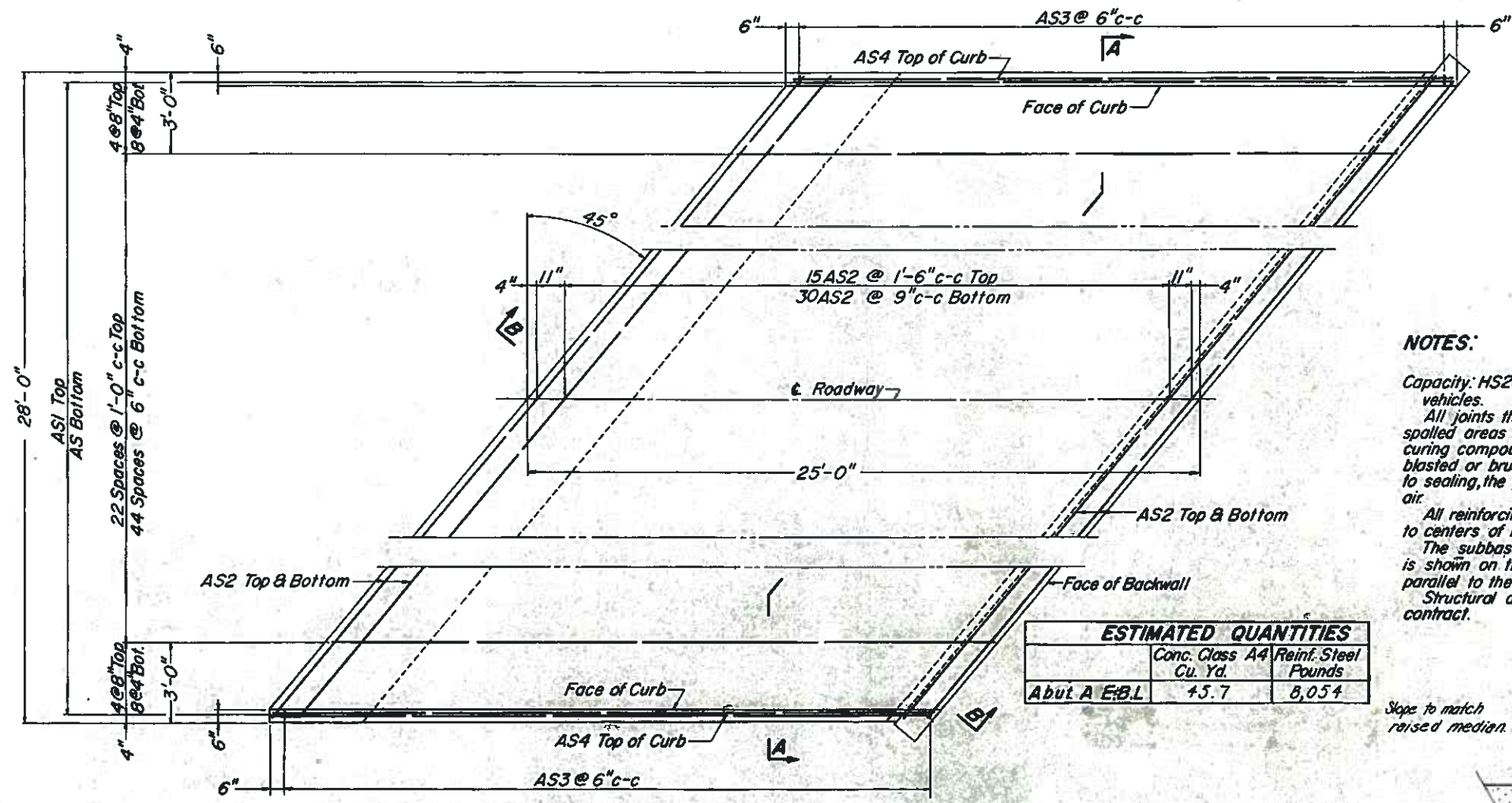

PLAN
Scale: 3/8"=1'-0"

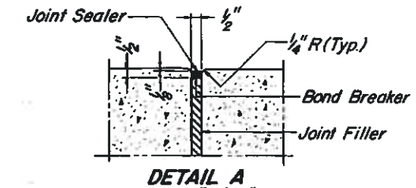

DETAIL A
Scale: 3"=1'-0"

NOTES:

Capacity: HS20-44 loading and B.P.R. modified loading for military vehicles.

All joints that are to be sealed shall be free of cracked and spalled areas and their faces shall be free of all foreign matter, curing compound, oils, greases, and dirt. All faces must be sand blasted or brushed with a mechanical rotary wire brush. Just prior to sealing, the joint shall be blown out with oil-free compressed air.

All reinforcing bar dimensions except for bending diagram are to centers of bars.

The subbase is to consist of the same material and depth as is shown on the roadway typical section and is to be placed parallel to the bottom of the approach slab.

Structural approach slabs are not included in the bridge contract.

ESTIMATED QUANTITIES	Conc. Class A4 Cu. Yd.	Reinf. Steel Pounds
Abut A E.B.L.	45.7	8,054

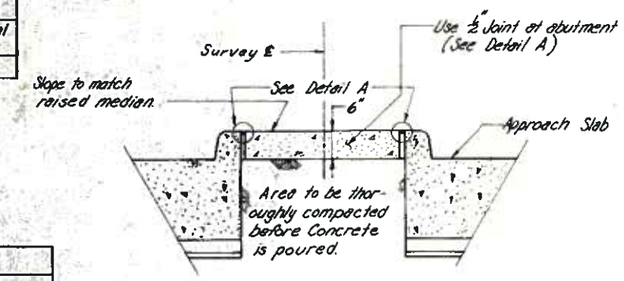

SECTION SHOWING RAISED MEDIAN BETWEEN APPROACH SLABS
Scale: 3/4"=1'-0"

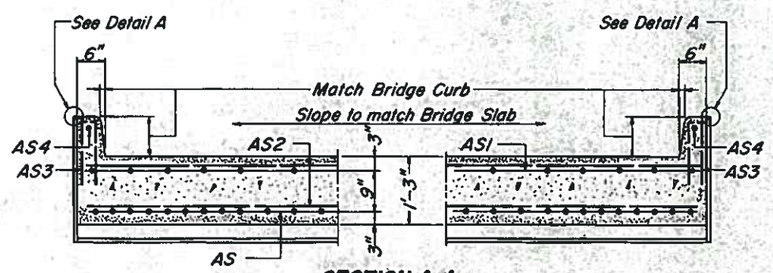

SECTION A-A
Scale: 3/4"=1'-0"

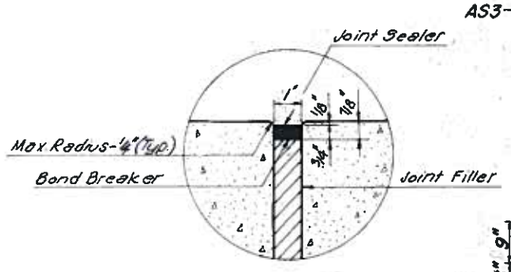

DETAIL B
Scale: 3"=1'-0"

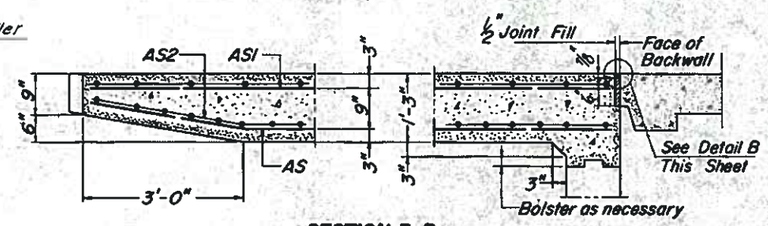

SECTION B-B
Scale: 3/4"=1'-0"

REINFORCING STEEL SCHEDULE					
Mark	No.	Size	Length	Pin	Location
AS	61	#9	24'-5"	9"φ	Bottom Longitudinal
AS1	31	#5	24'-5"	—	Top Longitudinal
AS2	±51	#5	39'-0"	—	Top & Bottom Transverse
AS3	98	#3	2'-5"	1 3/4"φ	Curb
AS4	2	#4	24'-5"	—	Curb

Dimensions in bending diagram are out to out of bar.

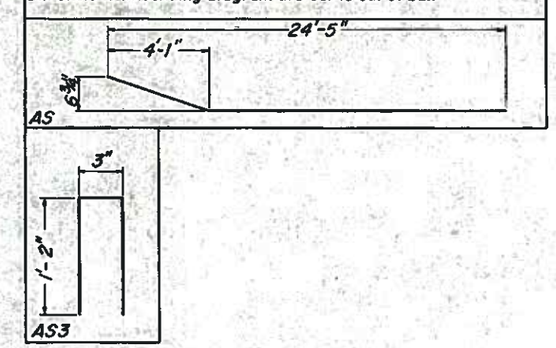

CANTRELL AVE. OVER BLACKS RUN, C.&W. RWY. AND CHESAPEAKE AVE.

APPROACH SLAB, ABUT. A - E.B.L.

Virginia Department of Highways
Office of the Bridge Engineer
Richmond, Virginia
Jan., 1970

224-17
Sheet 30 of 34

BAS-9 12-22-66

DRAWN BY: P.R.C. Jr.
TRACED BY: G.B.B.
CHECKED BY: J.H.P.

PUB. RD. REGION	STATE	FEDERAL AID ROUTE	FEDERAL AID PROJECT	STATE ROUTE	STATE PROJECT	SHEET NO.	TOTAL SHEETS
2	VA.				U000-115-101, B601	73-31	

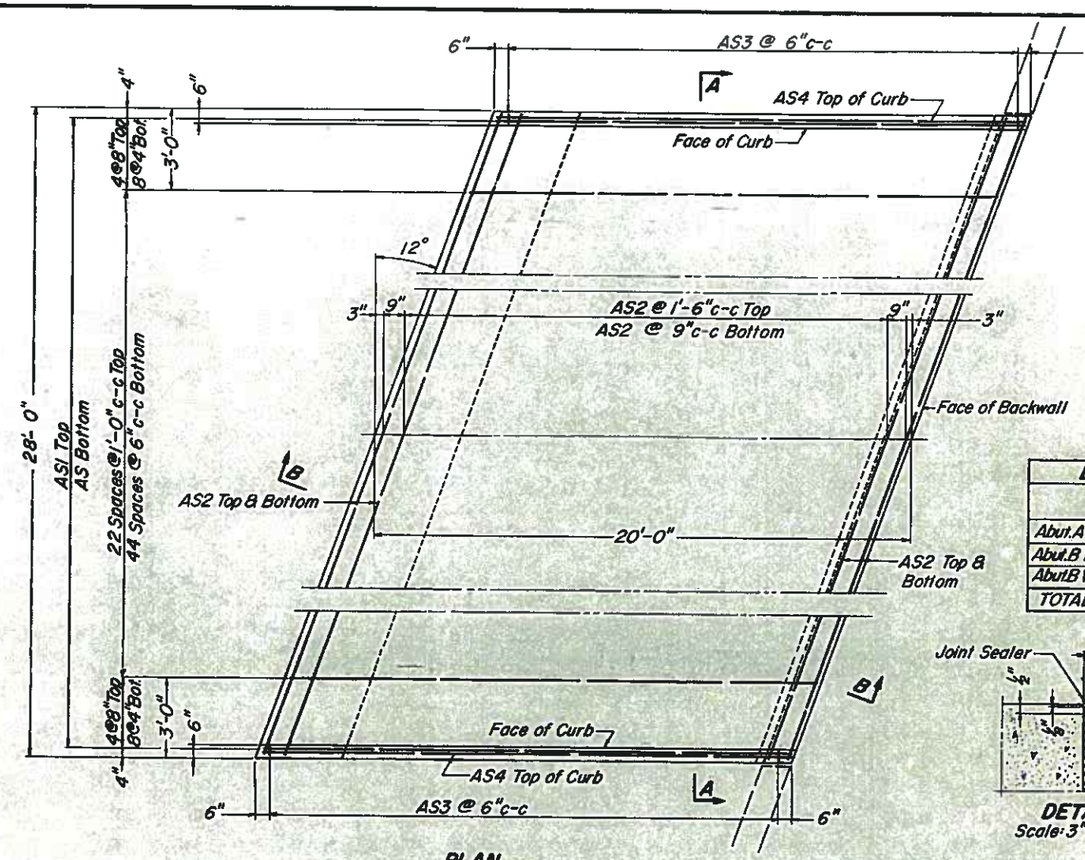

PLAN
Scale: 3/8" = 1'-0"

ESTIMATED QUANTITIES	Conc. Cl. A4 Cu. Yd.	Reinf. Steel Pounds
Abut. A W.B.L.	26.7	5,163
Abut. B E.B.L.	26.7	5,163
Abut. B W.B.L.	26.7	5,163
TOTALS	80.1	15,489

NOTES:

Capacity: HS20-44 loading and B.P.R. modified loading for military vehicles.

All joints that are to be sealed shall be free of cracked and spalled areas and their faces shall be free of all foreign matter, curing compound, oils, greases, and dirt. All faces must be sand blasted or brushed with a mechanical rotary wire brush. Just prior to sealing, the joint shall be blown out with oil-free compressed air.

All reinforcing bar dimensions except for bending diagram are to centers of bars.

The subbase is to consist of the same material and depth as is shown on the roadway typical section and is to be placed parallel to the bottom of the approach slab.

Structural approach slabs are not included in the bridge contract.

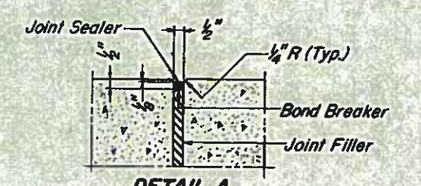

DETAIL A
Scale: 3" = 1'-0"

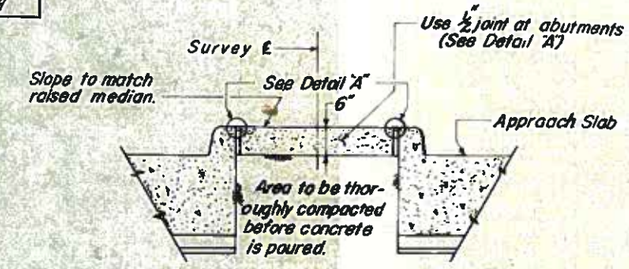

SECTION SHOWING RAISED MEDIAN BETWEEN APPROACH SLABS
Scale: 3/4" = 1'-0"

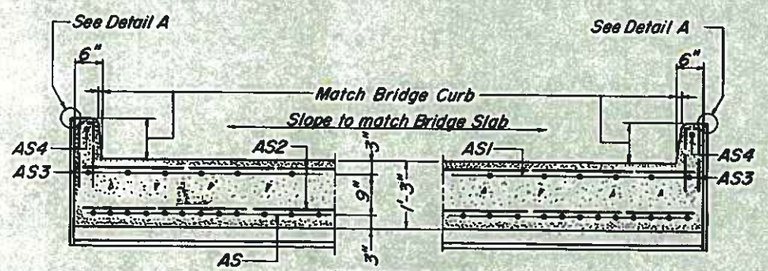

SECTION A-A
Scale: 3/4" = 1'-0"

REINFORCING STEEL SCHEDULE					
Mark	No.	Size	Length	Pin	Location
AS	183	#8	19'-8"	8"φ	Bottom Longitudinal
AS1	93	#5	19'-8"	—	Top Longitudinal
AS2	126	#5	28'-0"	—	Top & Bottom Transverse
AS3	234	#3	2'-5"	1 3/4"φ	Curb
AS4	6	#4	19'-8"	—	Curb

Dimensions in bending diagram are out to out of bar.

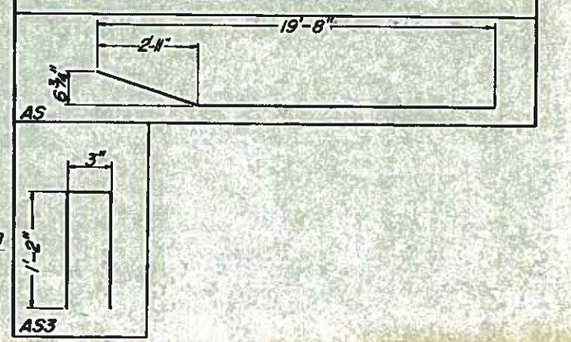

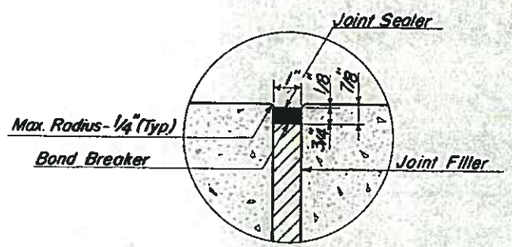

DETAIL B
Scale: 3" = 1'-0"

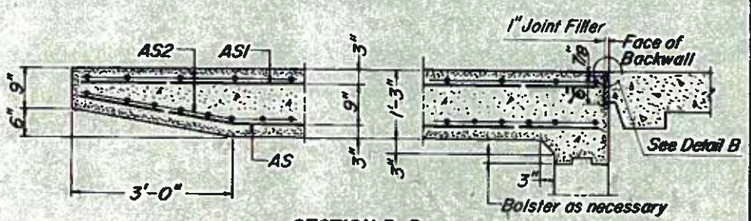

SECTION B-B
Scale: 3/4" = 1'-0"

CANTRELL AVE. OVER BLACKS RUN, C. & W. RWY. AND CHESAPEAKE AVE.
APPROACH SLABS

Virginia Department of Highways
Office of the Bridge Engineer
Richmond, Virginia
Jan., 1970

DRAWN BY: P.B.C. Jr.
TRACED BY: G.B.O.
CHECKED BY: J.H.B.

BAS-7 12-22-66

224-17
Sheet 31 of 34