ADDENDUM #1
ITB/RFP NUMBER: 2022013-PW-B
Mountain View Drive Stream Restoration ITB

DATE: December 10, 2021

TO: All Potential Bidders/Offerors

City of Harrisonburg's ITB, is modified as follows:

On December 8, 2021 at 2:00pm local time a mandatory pre-bid meeting was held for the above-referenced solicitation. Attached and made part of this addendum is the sign-in sheet from this meeting as well as the presentation document and meeting minutes.

In addition, the City is issuing updated Technical Specifications Manual (changes highlighted in yellow).

Lastly, the following items in the City's ITB document in the General Terms & Conditions (Section 0400) will need to be updated due to the upgrade and subsequent shut-down of eVA's VBO platform that was effective on December 1, 2021:

REVISIONS to the OFFICIAL ITB/RFP: No bidder/offeror shall modify, revise, edit or make any unauthorized change(s) to the original official ITB/RFP. ~~The official solicitation document and the Addenda(um) are the documents posted on the eVA website (www.eva.virginia.gov).~~ Due to the eVA upgrade and subsequent system shut down, all official solicitation documentation will temporarily be posted on the City's website (www.harrisonburgva.gov/bids-proposals). Any such violation as stated above may result in rejection of the ITB/RFP response. In addition, violations may result in the debarment of the bidder/offeror by the City of Harrisonburg.

SELECTION PROCESS/NOTICE OF AWARD: Upon the award or the announcement of the decision to award a contract as a result of this solicitation, the Purchasing office will publicly post such notice and/or will notify all responsive bidders/offerors and records are available for public inspection in accordance with the VA Freedom of Information Act (VA Code 2.2-3700 et seq). ~~The City posts all Notice of Awards on eVA at www.eva.virginia.gov~~. Due to the eVA upgrade and subsequent system shut down, all Notice of Award documentation will temporarily be posted on the City's website (www.harrisonburgva.gov/bids-proposals).

All other requirements, terms and conditions of the ITB/RFP remain unchanged.

Addendum page must be signed and returned with your bid/proposal to acknowledge receipt of this addendum.

_____
Authorized Signature

By: Shane B. Smith
Procurement Manager

PRE-BID ATTENDANCE
Mountain View Drive Stream Restoration
DEC. 8, 2021

NAME (Please Print)	COMPANY	PHONE	EMAIL
Jeremy Clatterbuck	RES	540-905-4387	jclatterbuck@res.us
Phillip Todd	North State Environmental	919-971-5641	p.todd@nsenv.com
Brandy Posada	WML Enterprises	571-310-4774	info@wmlenterprises.com
Frank Pruitt Kristen Pruitt	Finish Line Construction DBA Finish Line Environmental	540-371-3500	f.pruitt@flcva.com k.pruitt@flcva.com
Kaitlin Walker	Meadville Land Service	814-337-1974	kaitlin@meadvillelandservice.com
Jennings Sisler	AllStar Ecology, LLC	304-816-3490	jennings@allstarecology.com
Eric Mooney	Ecotone LLC	410-420-2600	EMooney@Ecotoneinc.com
David Frazier	Frazier Quarry	540-209-4397	David.Frazier@frazierquarry.com
Hans Harman	Momentum	540-564-1986	hans@momentumearthworks.com
Ralph Voyles	United Rentals	615-679-6828	rvoyles@ur.com

PRE-BID ATTENDANCE
Mountain View Drive Stream Restoration
DEC. 8, 2021

Chad Harlow	Aaron J Conner General Contractor	540-387-3941	chadharlow@ajconner.com
Bryan Gwyn	Bushong Contracting Corp	540-459-5975	estimating@bushongcontracting.com
Mike Sheets	Shenandoah Stream Works	720-357-7101	Msheets12@gmail.com
Philip Davis	DEQ	540-574-7814	Philip.davis@deq.virginia.gov
Tom Hartman Keith Thomas Danielle Morris Andy Powell	City of Harrisonburg	540-434-5928	Tom.Hartman@harrisonburgva.gov Keith.Thomas@harrisonburgva.gov Danielle.Morris@harrisonburgva.gov Andy.Powell@harrisonburgva.gov
Kip Mumaw Kyle Ashmun Jon Roller	Eco System Services		kip@ecosystemservices.us kyle@ecosystemservices.us jon@ecosystemsservices.us

Mountain View Drive Stream Restoration

Existing Conditions Overview

ECOSYSTEM SERVICES

Project Overview: Existing Conditions

WATERSHED

Peak Flow Analysis				
1-yr (cfs)	*2-yr (cfs)*	*10-yr (cfs)*	*25-yr (cfs)*	*100-yr (cfs)*
235.5	317.1	565.9	762.1	1,067

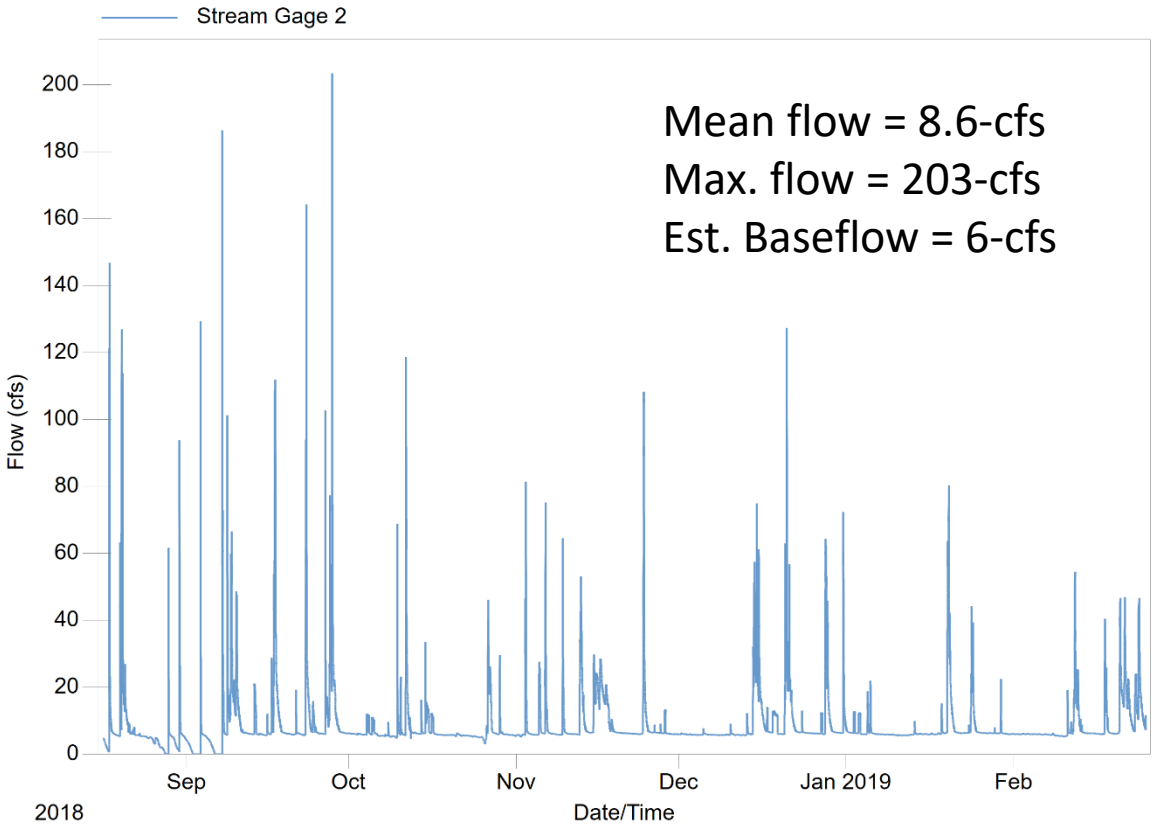

Reach 1

Reach 2

Reach 2

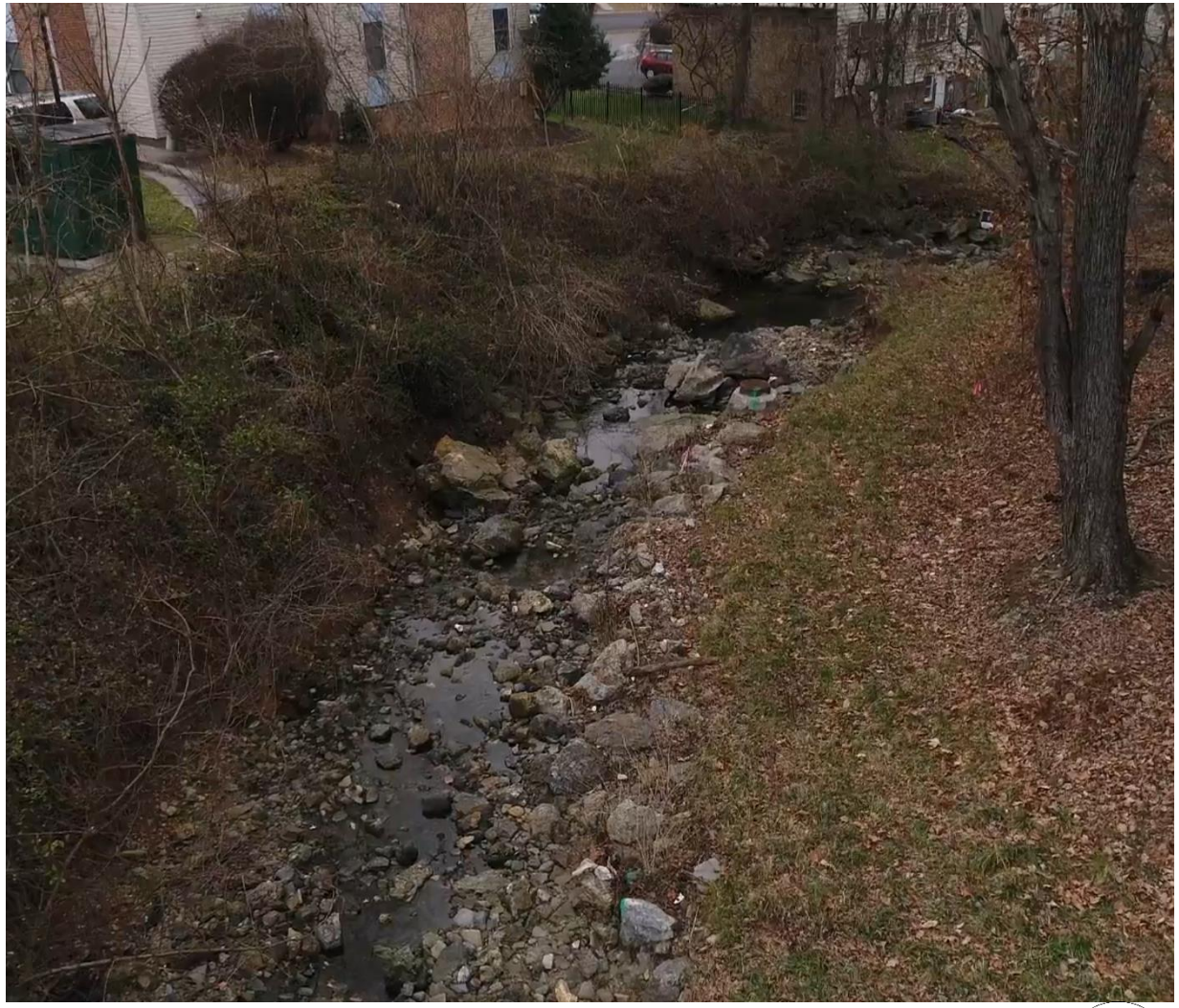

Reach 2

Reach 2

Reach 2

Reach 2

Reach 2

Invasives & Soils

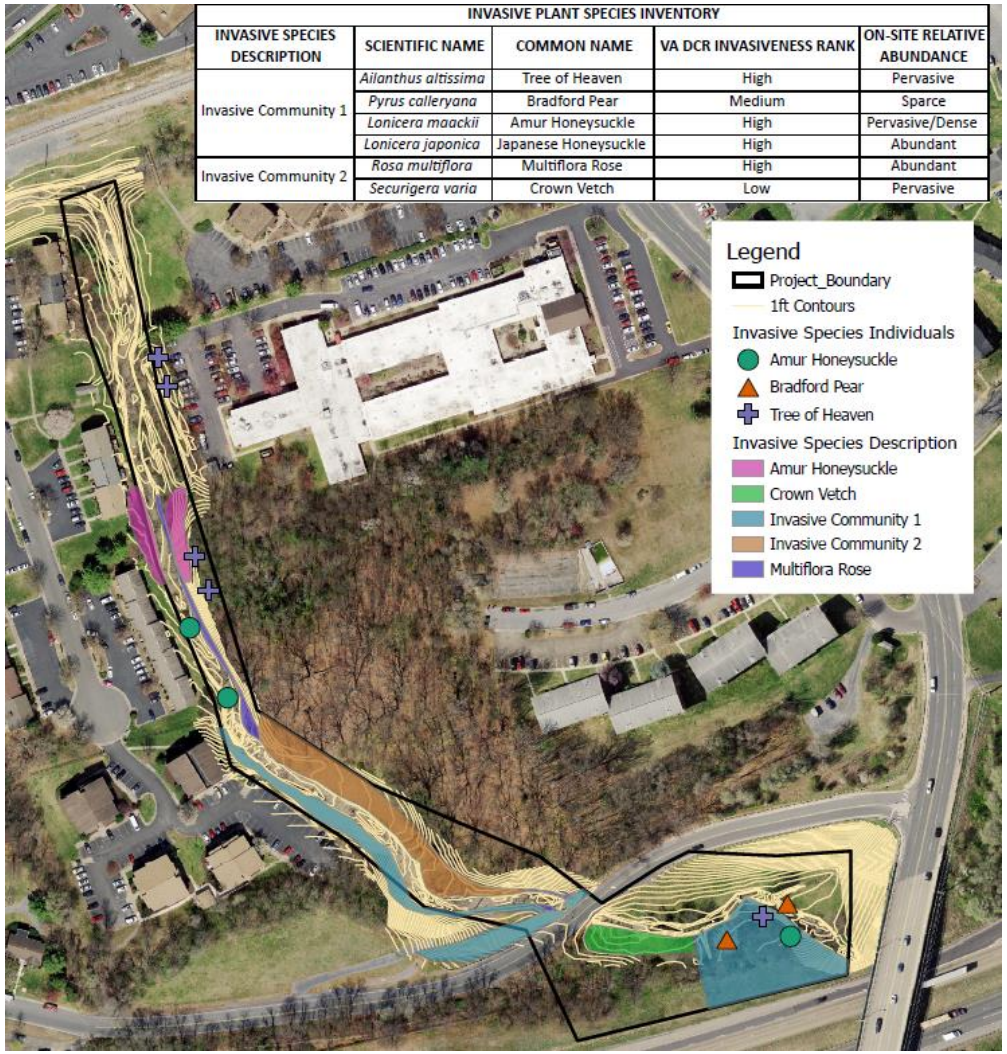

INVASIVE PLANT SPECIES INVENTORY

INVASIVE SPECIES DESCRIPTION	SCIENTIFIC NAME	COMMON NAME	VA DCR INVASIVENESS RANK	ON-SITE RELATIVE ABUNDANCE
Invasive Community 1	*Ailanthus altissima*	Tree of Heaven	High	Pervasive
	Pyrus calleryana	Bradford Pear	Medium	Sparce
	Lonicera maackii	Amur Honeysuckle	High	Pervasive/Dense
	Lonicera japonica	Japanese Honeysuckle	High	Abundant
Invasive Community 2	*Rosa multiflora*	Multiflora Rose	High	Abundant
	Securigera varia	Crown Vetch	Low	Pervasive

Site Number	OM %	P (ppm)	K (ppm)	NO_3N (ppm)	Total N	pH	Texture
S1BD1	2.3	4	40 (M-)	2	552	7.3	Clay
S1BD2	2.4	5	35 (L+)	1	811	7.0	Silt Clay Loam
S1BD3	2.6	2	25 (L)	3	593	7.3	Clay Loam
S2BD1	1.8	2	71 (M)	2	162	7.7	Clay
S2BD2	2.2	7	41 (M-)	4	624	7.9	Clay Loam
S3BD1	1.8	1	148 (H+)	9	389	5	Clay

Mountain View Drive Stream Restoration

Restoration Overview

ECOSYSTEM SERVICES

GEOMETRY

DESIGN PARAMETER SUMMARY TABLE	
PARAMETER	VALUE
TOP WIDTH (FT)	18.00
BOTTOM WIDTH (FT)	9.00
MAX DEPTH (FT)	1.60
BANK WIDTH (FT)	4.30

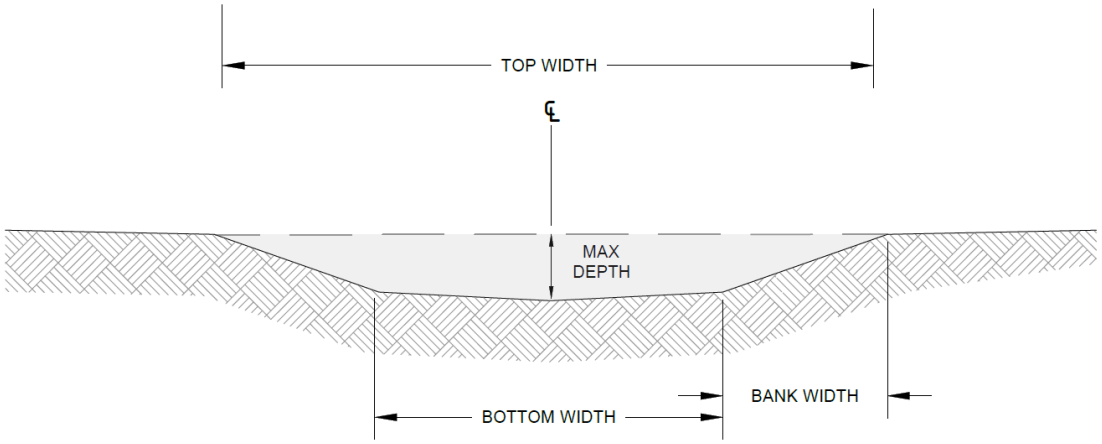

TYPICAL SECTION - RIFFLE
NTS

DESIGN PARAMETER SUMMARY TABLE	
PARAMETER	VALUE
TOP WIDTH (FT)	18-26
BOTTOM WIDTH (FT)	9.50
MAX DEPTH (FT)	1.8-5.6
BANK WIDTH (FT)	5.00

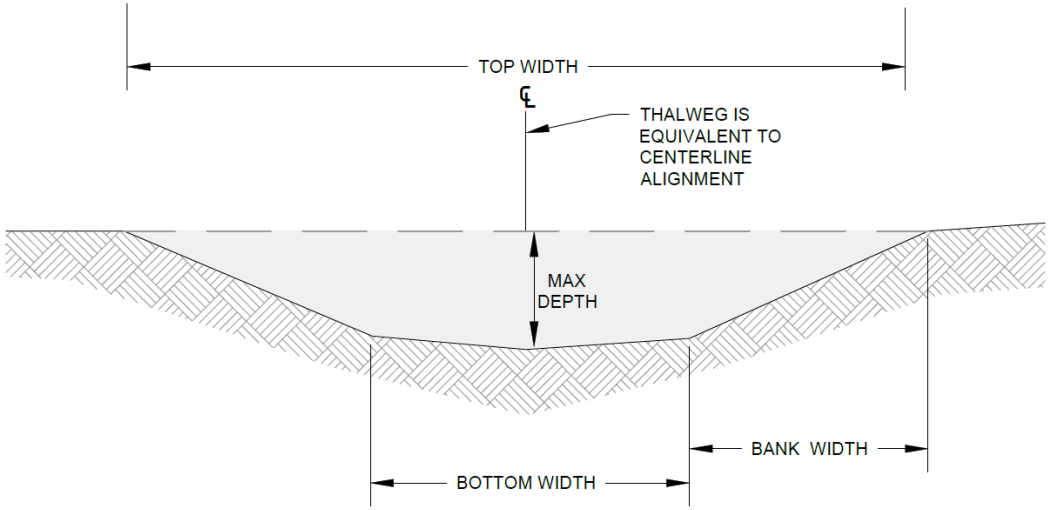

TYPICAL SECTION - POOL CENTER
NTS

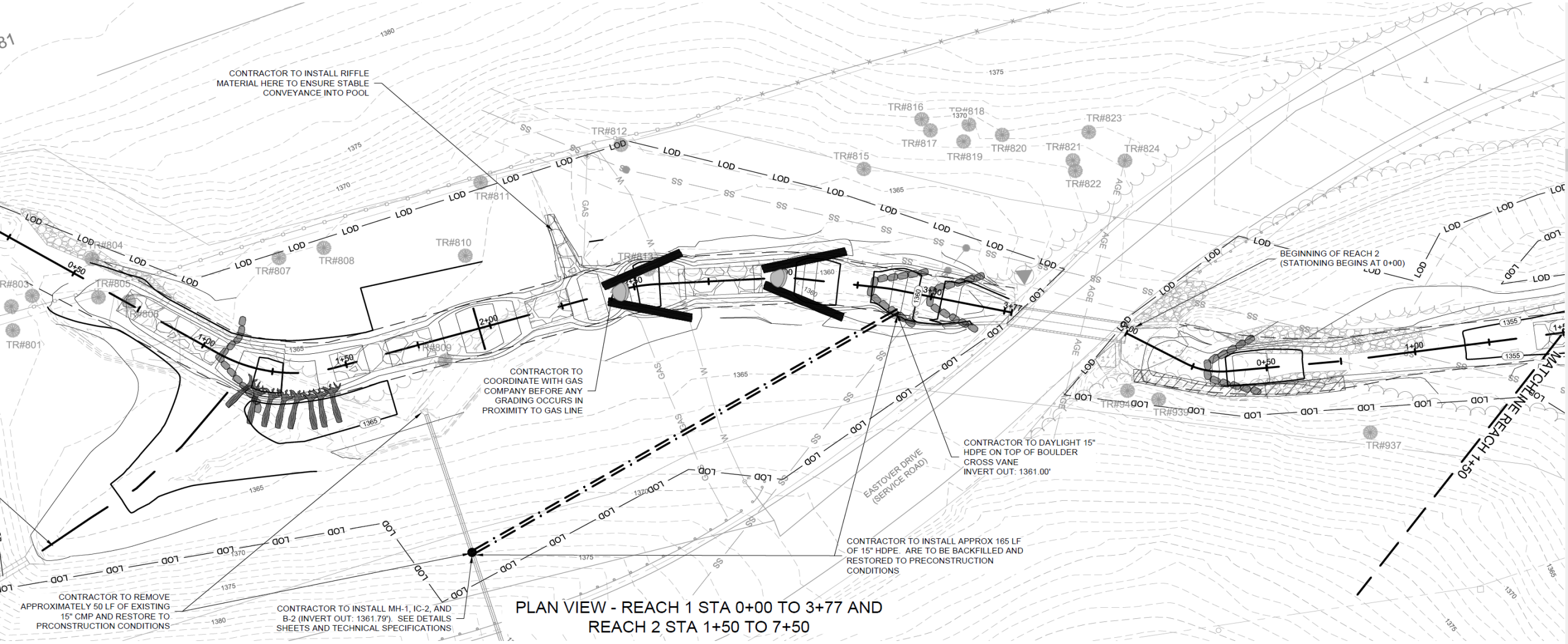

PLAN VIEW - REACH 1 STA 0+00 TO 3+77 AND REACH 2 STA 1+50 TO 7+50

Reach 1

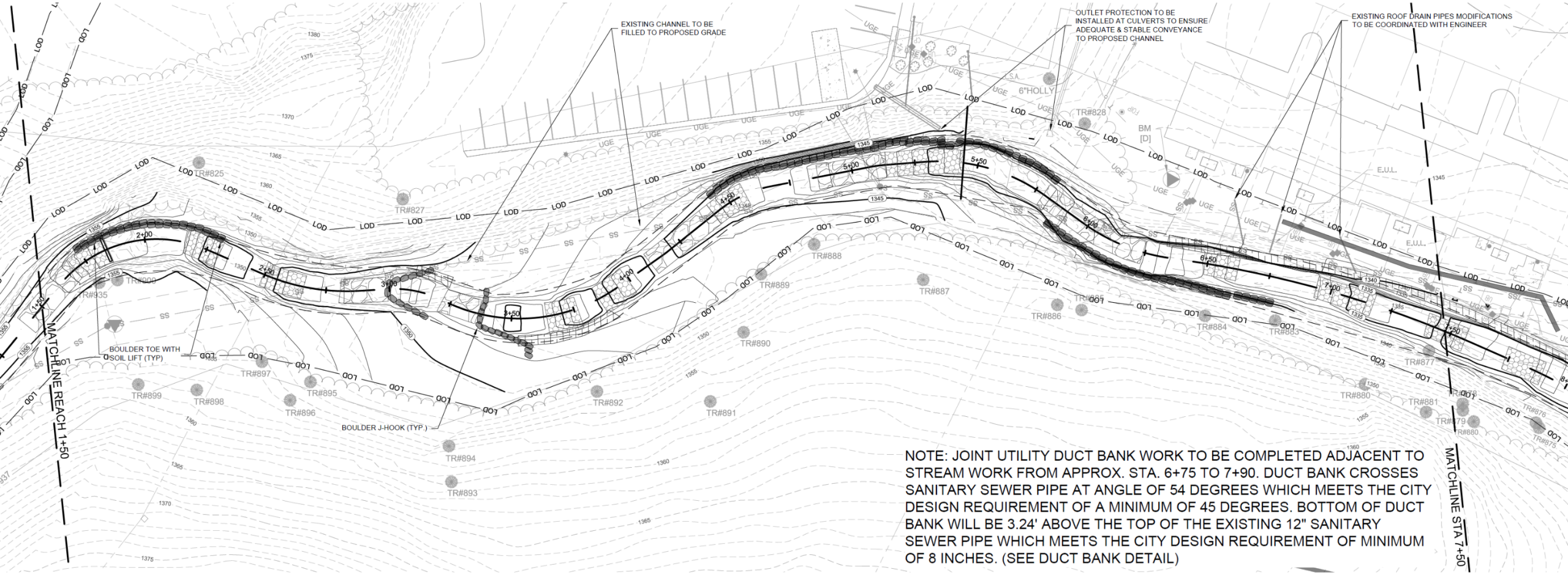

NOTE: JOINT UTILITY DUCT BANK WORK TO BE COMPLETED ADJACENT TO STREAM WORK FROM APPROX. STA. 6+75 TO 7+90. DUCT BANK CROSSES SANITARY SEWER PIPE AT ANGLE OF 54 DEGREES WHICH MEETS THE CITY DESIGN REQUIREMENT OF A MINIMUM OF 45 DEGREES. BOTTOM OF DUCT BANK WILL BE 3.24' ABOVE THE TOP OF THE EXISTING 12" SANITARY SEWER PIPE WHICH MEETS THE CITY DESIGN REQUIREMENT OF MINIMUM OF 8 INCHES. (SEE DUCT BANK DETAIL)

PLAN VIEW - REACH 2 STA 1+50 TO 7+50

Reach 2

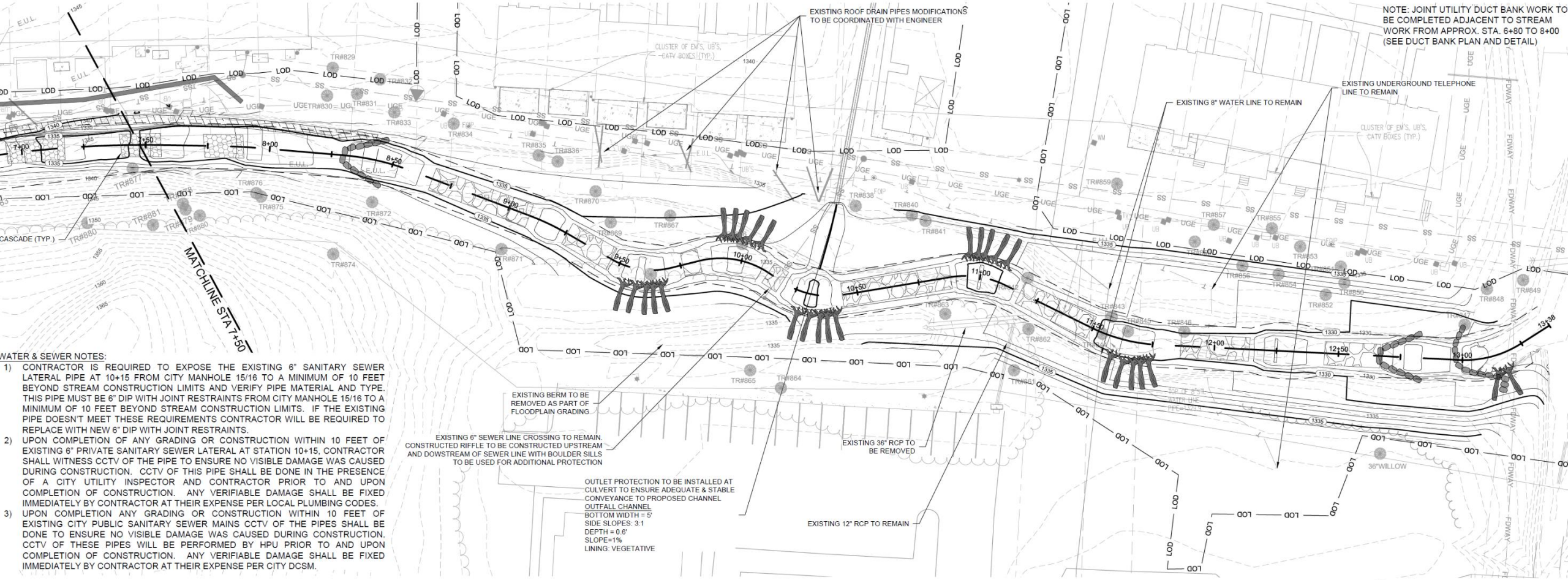

WATER & SEWER NOTES:

1) CONTRACTOR IS REQUIRED TO EXPOSE THE EXISTING 6" SANITARY SEWER LATERAL PIPE AT 10+15 FROM CITY MANHOLE 15/16 TO A MINIMUM OF 10 FEET BEYOND STREAM CONSTRUCTION LIMITS AND VERIFY PIPE MATERIAL AND TYPE. THIS PIPE MUST BE 6" DIP WITH JOINT RESTRAINTS FROM CITY MANHOLE 15/16 TO A MINIMUM OF 10 FEET BEYOND STREAM CONSTRUCTION LIMITS. IF THE EXISTING PIPE DOESN'T MEET THESE REQUIREMENTS CONTRACTOR WILL BE REQUIRED TO REPLACE WITH NEW 6" DIP WITH JOINT RESTRAINTS.
2) UPON COMPLETION OF ANY GRADING OR CONSTRUCTION WITHIN 10 FEET OF EXISTING 6" PRIVATE SANITARY SEWER LATERAL AT STATION 10+15, CONTRACTOR SHALL WITNESS CCTV OF THE PIPE TO ENSURE NO VISIBLE DAMAGE WAS CAUSED DURING CONSTRUCTION. CCTV OF THIS PIPE SHALL BE DONE IN THE PRESENCE OF A CITY UTILITY INSPECTOR AND CONTRACTOR PRIOR TO AND UPON COMPLETION OF CONSTRUCTION. ANY VERIFIABLE DAMAGE SHALL BE FIXED IMMEDIATELY BY CONTRACTOR AT THEIR EXPENSE PER LOCAL PLUMBING CODES.
3) UPON COMPLETION ANY GRADING OR CONSTRUCTION WITHIN 10 FEET OF EXISTING CITY PUBLIC SANITARY SEWER MAINS CCTV OF THE PIPES SHALL BE DONE TO ENSURE NO VISIBLE DAMAGE WAS CAUSED DURING CONSTRUCTION. CCTV OF THESE PIPES WILL BE PERFORMED BY HPU PRIOR TO AND UPON COMPLETION OF CONSTRUCTION. ANY VERIFIABLE DAMAGE SHALL BE FIXED IMMEDIATELY BY CONTRACTOR AT THEIR EXPENSE PER CITY DCSM.

PLAN VIEW - REACH 2 STA 7+50 TO 13+40

REACH 2

Planting

STREAMBANK PLANTING ZONE (0.24 AC):

	Species Name	Common Name	Spacing	Stock Type	% of Total	Calculated Quantity
LIVESTAKES	*Physocarpus opulifolius*	Ninebark	3' O.C.	Livestake	25%	367
	Cephalanthus occidentalis	Buttonbush	3' O.C.	Livestake	25%	367
	Cornus amomum	Silky Dogwood	3' O.C.	Livestake	25%	367
	Salix sericea	Silky Willow	3' O.C.	Livestake	25%	367
Total					**100%**	**1467**
STREAMBANK HERBACEOUS VEGETATION	*Carex crinita*	Fringed Sedge	3' O.C.	1 quart container	10%	147
	Schoenoplectus cyperinus	Woolgrass	3' O.C.	1 quart container	10%	147
	Juncus effusus	Soft Rush	3' O.C.	1 quart container	10%	147
	Panicum virgatum	Switchgrass	3' O.C.	1 quart container	25%	367
	Schoenoplectus pungens	Common Three Square	3' O.C.	1 quart container	10%	147
	Eutrochium fistulosum	Joe Pye Weed	3' O.C.	1 quart container	15%	220
	Elymus riparius	River Bank Wild Rye	3' O.C.	1 quart container	10%	147
	Uniola latifolia	River Oats	3' O.C.	1 quart container	10%	147
Total					**100%**	**1467**

BUFFER PLANTING ZONE (1.03 AC):

	Species Name	Common Name	Spacing	Stock Type	% of Total	Calculated Quantity
OVERSTORY RIPARIAN BUFFER	*Plantanus occidentalis*	Sycamore	10' O.C.	3 gallon container	25%	97
	Diospyros virginiana	Eastern Persimmon	10' O.C.	3 gallon container	25%	97
	Nyssa sylvatica	Black Gum	10' O.C.	3 gallon container	25%	97
	Betula nigra	River Birch	10' O.C.	3 gallon container	25%	97
Total					**100%**	**387**
UNDERSTORY RIPARIAN BUFFER	*Acer rubrum*	Red Maple	6' O.C.	3 gallon container	10%	108
	Carpinus caroliniana	Ironwood	6' O.C.	3 gallon container	10%	108
	Cephalanthus occidentalis	Common Buttonbush	6' O.C.	3 gallon container	15%	161
	Lindera Benzoin	Spicebush	6' O.C.	3 gallon container	10%	108
	Cornus amomum	Silky Dogwood	6' O.C.	3 gallon container	10%	108
	Sambucus canadensis	Common Elderberry	6' O.C.	3 gallon container	15%	161
	Physocarpus opulifius	Common Ninebark	6' O.C.	3 gallon container	10%	108
	Aronia melanocarpa	Black Chokeberry	6' O.C.	3 gallon container	10%	108
	Calycanthus floridus	Sweetshrub	6' O.C.	3 gallon container	10%	108
Total					**100%**	**1075**
HERBACEOUS RIPARIAN BUFFER	*Panicum virgatum*	Switchgrass	3' O.C.	1 quart container	30%	1283
	Eutrochium fistulosum	Joe Pye Weed	3' O.C.	1 quart container	10%	428
	Elymus riparius	River Bank Wild Rye	3' O.C.	1 quart container	15%	642
	Uniola latifolia	River Oats	3' O.C.	1 quart container	15%	642
	Monarda didyma	Scarlet Beebalm	3' O.C.	1 quart container	10%	428
	Lupinus perennis	Wild Lupine	3' O.C.	1 quart container	5%	214
	Juncus effusus	Soft Rush	3' O.C.	1 quart container	10%	428
	Carex crinita	Fringed Sedge	3' O.C.	1 quart container	5%	214
Total					**100%**	**4277**

SANITARY SEWER LINE EASEMENT PLANTING ZONE (0.13 AC):

	Species Name	Common Name	Spacing	Stock Type	% of Total	Calculated Quantity
SHRUB RIPARIAN UTILITY ZONE	*Calycanthus floridus*	Sweetshrub	6' O.C.	3 gallon container	25%	40
	Sambucus canadensis	Common Elderberry	6' O.C.	3 gallon container	25%	40
	Cephalanthus occidentalis	Common Buttonbush	6' O.C.	3 gallon container	25%	40
	Lindera Benzoin	Spicebush	6' O.C.	3 gallon container	25%	40
Total					**100%**	**162**
HERBACEOUS RIPARIAN UTILITY ZONE	*Carex crinita*	Fringed Sedge	3' O.C.	1 quart container	10%	65
	Schoenoplectus cyperinus	Woolgrass	3' O.C.	1 quart container	5%	32
	Juncus effusus	Soft Rush	3' O.C.	1 quart container	10%	65
	Panicum virgatum	Switchgrass	3' O.C.	1 quart container	20%	130
	Schoenoplectus pungens	Common Three Square	3' O.C.	1 quart container	5%	32
	Eutrochium fistulosum	Joe Pye Weed	3' O.C.	1 quart container	5%	32
	Elymus riparius	River Bank Wild Rye	3' O.C.	1 quart container	5%	32
	Uniola latifolia	River Oats	3' O.C.	1 quart container	10%	65
	Monarda didyma	Scarlet Beebalm	3' O.C.	1 quart container	5%	32
	Lupinus perennis	Wild Lupine	3' O.C.	1 quart container	5%	32
	Rudbeckia hirta	Black-Eyed Susan	3' O.C.	1 quart container	5%	32
	Liatris spicata	Marsh Blazing Star	3' O.C.	1 quart container	5%	32
	Baptisia australis	Blue Wild Indigo	3' O.C.	1 quart container	5%	32
	Symphyotrichum novae-angliae	New England Aster	3' O.C.	1 quart container	5%	32
Total					**100%**	**648**

PERMANENT SEED MIX (1.38 AC @ 25 LBS/AC)

Species	Common Name	Indicator Status	Percent of Total
Virginia Wild Rye	*Elymus virginicus*	FACW	20
Switchgrass	*Panicum virgatum*	FAC	25
Little bluestem	*Schizachyrium scoparium*	FACU	15
Soft rush	*Juncus effusus*	FACW	10
Deer tongue	*Dichanthelium clandestinum*	FAC	10
Indiangrass	*Sorghastrum nutans*	FACU	10
Wingstem	*Verbesina alternifolia*	FAC	5
White Oldfield Aster	*Symphyotrichum pilosum*	FAC	5

Construction Access

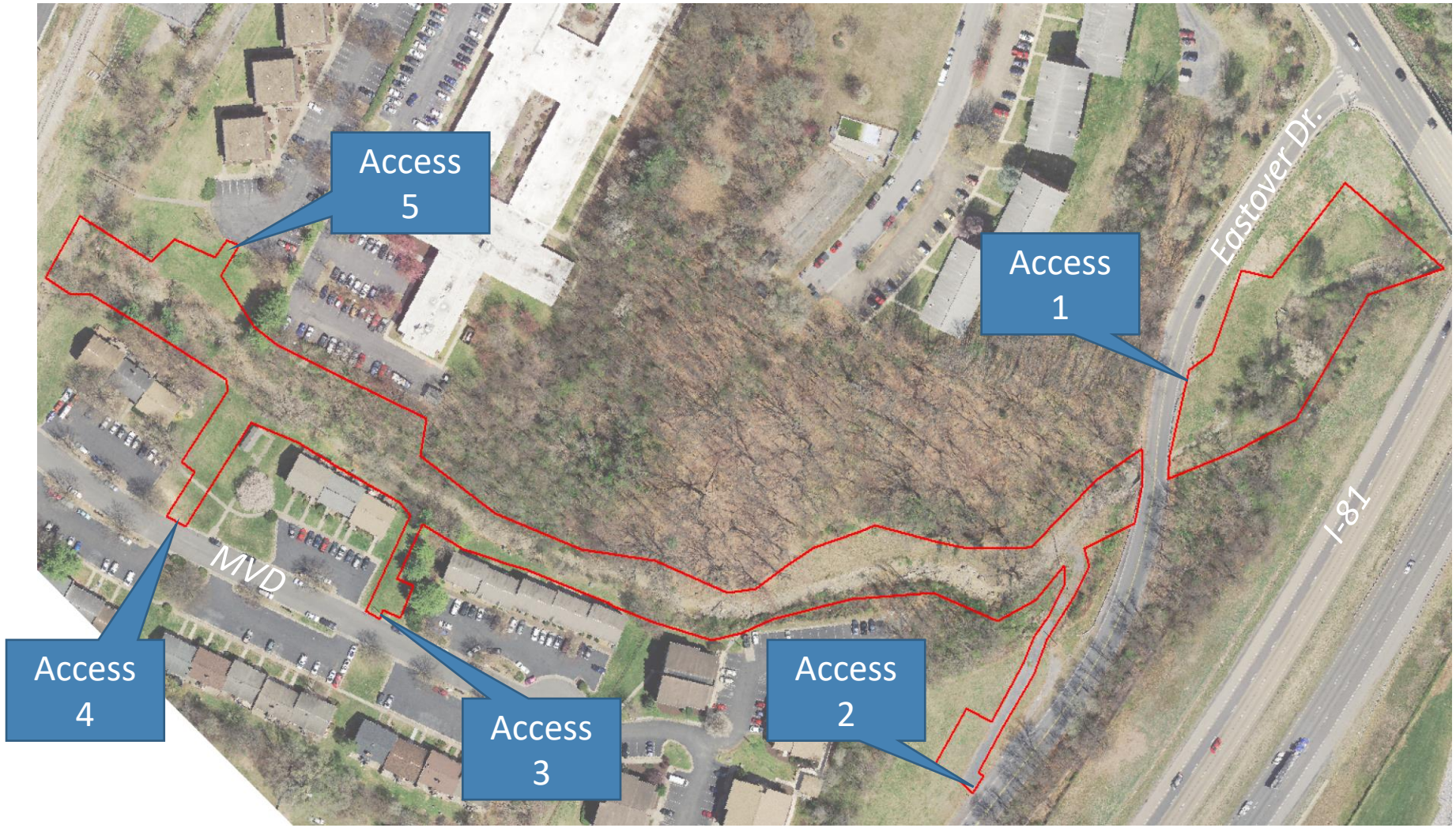

ECOSYSTEM SERVICES

ENGINEERING | ECOLOGICAL RESTORATION | CONSULTING

PRE-BID CONFERENCE AGENDA – Mandatory
MEETING MINUTES

PROJECT: **MOUNTAIN VIEW DR. STREAM RESTORATION PROJECT # 2022013-PW-B**

DATE: **DEC. 8, 2021** **TIME: 2:00 PM**

LOCATION: **GOTO MEETING**

AGENDA ITEMS

1. **Introductions**

2. **Anticipated Schedule**
   - Holding Pre-Bid Meeting on Dec. 8, 2021
   - Written questions due **Jan. 5, 2022, at 12:00pm (received via Purchasing Dept.)**
   - Issue a final addendum (if necessary) addressing items discussed today on/before Jan. 7, 2022.
   - Receive and open bids – **Jan. 12, 2022, at 3:00pm (bids due in Purchasing on 3rd Floor – to be opened in room #11 at City Hall) with one exception – prices will not be announced, just the bidders**

3. **Project Overview –** Provided by Ecosystem Services
   - Description of project – slide show attached to this addendum. Drone footage will be supplied at a later date.
   - Existing conditions
   - Restoration approach

4. **Bid Documentation and Paperwork**
   - Please make sure all forms are filled out completely. List of what is required is in Section 0100 #2, C – separate bid price envelope and #5 A and B has the details.

5. **Site Visits –** contact Keith Thomas, City of Harrisonburg, 540-434-5928 ext. 2204, Keith.Thomas@harrisonburgva.gov Available dates for site visits: Dec. 13, 16, 17, 20, 21, 22 and Jan. 3 & 4

6. **Questions**
   1. Will the slide show presented during pre-bid be available in addendum 1?

      Yes.

MOUNTAIN VIEW DRIVE STREAM RESTORATION

TECHNICAL SPECIFICATIONS MANUAL

Prepared For:
City of Harrisonburg
Attn: Tom Hartman, PE
Public Works Department
320 East Mosby St.
Harrisonburg, VA 22801

Prepared By:

Ecosystem Services, LLC
Attn: Kip Mumaw, P.E.
1739 Allied Drive, Suite A
Charlottesville, VA 22903

August 2021

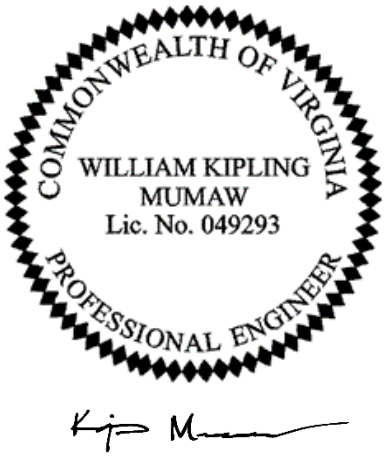

Table Of Contents

SECTION 1: SITE PREPARATION 1

SPECIAL PROVISION 1: MOBILIZATION 1
SPECIAL PROVISION 2: CONSTRUCTION STAKEOUT 1
SPECIAL PROVISION 3: PHOTOGRAPHIC DOCUMENTATION 2

SECTION 2: SITE MAINTENANCE 4

SPECIAL PROVISION 4: EROSION & SEDIMENT CONTROL 4
SPECIAL PROVISION 5: STREAMFLOW MAINTENANCE 4
SPECIAL PROVISION 6: TEMPORARY ACCESS PATH 5
SPECIAL PROVISION 7: STAGING AND STOCKPILE AREAS 6
SPECIAL PROVISION 8: CLEARING & GRUBBING 8

SECTION 3: STREAM CONSTRUCTION 9

SPECIAL PROVISION 9: EARTHWORK 9
SPECIAL PROVISION 10: NATURAL FIBER MATTING 10
SPECIAL PROVISION 11: GEOTEXTILE FABRIC 11
SPECIAL PROVISION 12: STREAM BED MATERIAL 12
SPECIAL PROVISION 13: BOULDER MATERIAL 13
SPECIAL PROVISION 14: LOGS 14
SPECIAL PROVISION 15: BRUSH TOE 14
SPECIAL PROVISION 16: BOULDER CROSS VANE 16
SPECIAL PROVISION 17: LOG CROSS VANE 19
SPECIAL PROVISION 18: RIFFLE 21
SPECIAL PROVISION 19: CASCADE 22
SPECIAL PROVISION 20: BOULDER J-HOOK 24
SPECIAL PROVISION 21: IMBRICATED WALL 26
SPECIAL PROVISION 22: BOULDER TOE WITH SOIL LIFT 28

SECTION 4: INFRASTRUCTURE 30

SPECIAL PROVISION 23: CULVERT REMOVAL & STORMWATER INFRASTRUCTURE INSTALLATION 30
SPECIAL PROVISION 24: JOINT UTILITY DUCT BANK 31

SECTION 5: PLANTING 34

SPECIAL PROVISION 25: TOPSOIL 34
SPECIAL PROVISION 26: COMPOST 35
SPECIAL PROVISION 27: PLANTING TREES, SHRUBS, & HERBACEOUS PLUGS 36
SPECIAL PROVISION 28: LIVE STAKES 40

SPECIAL PROVISION 29: PERMANENT SEEDING & TEMPORARY SEEDING 41
SPECIAL PROVISION 30: INVASIVE SPECIES REMOVAL 43

SECTION 6: CONSTRUCTION TOLERANCES AND OVERSIGHT 45

SPECIAL PROVISION 31: CONSTRUCTION TOLERANCES 45
SPECIAL PROVISION 32: CONSTRUCTION OVERSIGHT 45
SPECIAL PROVISION 33: AS-BUILT SURVEY 45

Appendix A: Mt. View Drive Stream Restoration Engineering Plans
Appendix B: Invasive Species Map

Section 1: Site Preparation

Special Provision 1: Mobilization

1. Description

Mobilization shall consist of furnishing, transporting, and stockpiling of all Materials for assembling and setting up for the project's operations. Mobilization shall include, but is not limited to, all activities and associated costs for transportation of Contractor's personnel, equipment, and operating supplies to the site; establishment of offices, buildings, staging areas, stockpiling areas, and other necessary general facilities for the Contractor's operations at the site, including coinsurance and reinsurance agreements as applicable; and other items specified.

Mobilization shall include sanitary facilities. The Contractor shall furnish and install temporary sanitary facilities for use throughout the Construction period. This includes containers to dispense drinking water, enclosed toilet facilities and general washing facilities for Construction personnel, which complies with OSHA safety and health regulations and local ordinances. Appropriate sanitary facilities are to be established within the project site.

Mobilization shall include all activities and costs for demobilization as well, including transportation of personnel, equipment, and supplies not required or included in the contract from the site, in addition to disassembly, removal, and site cleanup.

2. Measurement and Payment

Mobilization, including demobilization, shall be measured and paid for as a lump sum (LS) item. No additional payment will be made for demobilization and remobilization because of shutdowns, suspensions of work, or other mobilization activities.

Fifty percent (50%) of the mobilization will be paid on the initial movement of equipment and personnel. Another 25% will be paid midway through the project. The last 25% will be paid at completion of demobilization.

Special Provision 2: Construction Stakeout

1. Description

Construction stakeout survey shall include, but not be limited to, setting the Construction baseline staking the proposed channel centerline (PT, PC, and radius of curvature), staking of structures, and any other survey incidental to Construction or as directed by the City of Harrisonburg and/or Engineer. At a minimum, the Contractor is responsible for:

- All Construction staking including point of tangency, point of curvature, radius point, and limits of Construction.
- Layout and maintenance of a Construction baseline that is offset from the baseline.
- Staking all horizontal centerline control, elevation benchmarks, and structure

location and elevation.
- Erosion and sediment control and critical areas.
- Benchmarks shall be set and preserved.

2. Measurement and Payment

Construction stakeout shall be measured and paid for as a lump sum (LS) item. The payment will be full compensation for furnishing, placing, and maintaining Construction stakeout necessary to complete the work.

Special Provision 3: Photographic Documentation

1. Description

Photographic requirements for photographic documentation of Construction and their required submittals. At a minimum, the Construction Oversight Consultant is responsible for:

- Submit photographs taken prior to start of Construction to show original site conditions.
- Submit color progress photographs in a digital format (JPEG, JPG, BMP, or TIFF file types) with each payment application. Progress photos are to be taken no more than seven (7) days before inclusion with payment application. Files shall be labeled in such a way so as to easily determine the date taken. Photos should be submitted on a clearly labeled CD or DVD, or other digital media approved by the City of Harrisonburg.

2. Execution

A. PreConstruction Photographs

- Prior to commencement of any Construction, take color photographs of entire limits of project and streets proposed to detour traffic or where Construction traffic will ingress/egress the project site. Present digital copy to the City of Harrisonburg for use in contract administration and inspection.
- Take sufficient number of photographs to show structural condition of concrete/asphalt and conditions of existing trees, shrubs, and grass. Fully document conditions of adjacent features such as driveway entrances, sidewalks, gardens, etc.

B. Progress Photographs

- Progress photos need only be taken in disturbed or active areas of Construction.

C. Post-Construction Photographs

- Upon final stabilization, but prior to project close-out, take color photographs of all features originally documented in item A.
- Document any changes evident in photographs that represent damage or concerns

to adjacent property and provide to the City of Harrisonburg.

- Contractor shall be responsible for repair or replacement of damaged structures or property.

3. Measurement and Payment

Payment is included in the cost of Construction administration to the Consultant.

Section 2: ***Site Maintenance***

Special Provision 4:Erosion & Sediment Control

1. Description

An Erosion and Sediment Control (ESC) Plan has been completed and is included in the approved Construction plan set. Contractor shall perform all work in accordance with the Virginia Erosion and Sediment Control Handbook, Third Edition, dated 1992, the Contract Documents, or as directed by the City of Harrisonburg and/or Engineer.

2. Measurement and Payment

Erosion and Sediment Control will be measured for payment on a linear foot (LF) basis for Silt Fence and Safety Fence, per each (EA) for Construction Entrance, Tree Protection, and Temporary Stream Crossing. The payment will be full compensation for furnishing, installing, maintaining, and removing all erosion and sediment control measures shown on the plans, including all Materials, labor, equipment, tools, and incidentals necessary to complete the work as specified in the Construction Drawings, or as directed by the City of Harrisonburg and/or Engineer.

Special Provision 5: Streamflow Maintenance

1. Description

This work shall consist of furnishing, installing, maintaining, and removing any and all pump around systems used on this project. The Contractor shall install a pump around system in locations shown on plans and approved by the City of Harrisonburg and/or Engineer. The number of pump around operations may be increased, decreased, or eliminated. Such variations in quantity will not be considered as alterations in the details of Construction or a change in the character of the work.

2. Materials

A. Sandbags

Sandbags shall consist of Materials which are resistant to ultraviolet radiation, tearing, and puncture and woven tightly enough to prevent leakage of fill material (i.e. sand, fine gravel, etc.).

B. Sheeting

Sheeting shall consist of polyethylene plastic, which is impervious and resistant to puncture and tearing.

C. Pump(s)

Pump(s) shall be large enough to maintain uninterrupted base flow to the channel downstream of the work area. The pump around shall include a hose suitable to convey

water overland to the downstream section. Minimum linear feet of hose required is equivalent to the maximum estimate for one workday provided by the Contractor. The pump shall be shut off at night and baseflow shall flow through the completed and stabilized portion of the project into the existing downstream channel unless otherwise noted in the Contract Documents.

D. Filter bags

Filter bags made of non-woven geotextile as specified in the Contract Documents shall be used for dewatering the turbid water within the active work area.

3. Construction

A. Installation of sand bags, sheeting, and pump around shall be in accordance with the approved erosion and sediment control plan in the Contract Documents, or as directed by the City of Harrisonburg.

B. The diversion structure shall be installed from upstream to downstream.

C. The height of the sand bag diversion structure shall be a minimum of baseflow depth plus one foot, and a minimum of 2 feet. Further, the sand bag diversion shall be of sufficient height as to provide a pool deep enough to maintain pumping operations.

D. Sheeting shall overlap the sandbags such that the upstream portion covers the downstream sandbag face with at least an 18 inch overlap.

E. When dewatering the work area, the pump shall discharge into a non-woven geotextile filter bag of adequate size to accommodate the incoming flow as specified in the Contract Documents. The filter bag must be placed within the Limits of Disturbance on a flat surface to allow dewatering without creating erosive conditions in the area of the outfall.

4. Measurement and Payment

Stream Flow Maintenance (also referred to as pump around practice) shall be measured and paid for as a lump sum (LS) item. The payment will be full compensation for installing and maintaining stream flow maintenance. Payment shall include sand bags, geotextile fabric, pumps, hoses, and any other Materials, labor, equipment, tools, stockpiling, and incidentals necessary to complete the work as specified in the Construction Drawings, or as directed by the City of Harrisonburg and/or Engineer.

Special Provision 6:Temporary Access Path

1. Description

This work shall consist of installing, maintaining, and removing a temporary access path constructed of shredded hardwood mulch for the purpose of maintaining a stable access path to active Construction areas and minimizing ground and tree disturbance as specified

in the Contract Documents, or as directed by the City of Harrisonburg and/or Engineer and/or Engineer.

2. Materials

A. Shredded Hardwood Mulch

Shredded hardwood mulch shall consist of natural wood and bark from hardwood trees that has been milled and screened to a maximum 4 in. particle size.

3. Construction

A. Installation

The access paths shall be a minimum of 10-feet wide and 6 inches in depth. These dimensions shall be maintained throughout the duration of the project.

B. Upon completion of Construction activities, mulch access roads will be removed or abandoned in place as directed by the City of Harrisonburg and/or Engineer.

C. Cleanup

During installation of mulch access paths, all areas shall be kept neat, clean, and free of all trash and debris, and all reasonable precautions shall be taken to avoid damage to existing plants, turf, structures, and private property. The Contractor shall be responsible for onsite and/or offsite removal of mulch during final stabilization and close-out of project.

4. Measurement and Payment

Temporary access paths shall be measured and paid for at the contract unit price per cubic yard (CY) of access path installed. The payment will be full compensation for the installation, maintenance, and removal of the temporary access path as shown on the plans, including all Materials, labor, equipment, tools, stockpiling and incidentals necessary to complete the work as specified in the Construction Drawings, or as directed by the City of Harrisonburg.

Special Provision 7: Staging and Stockpile Areas

1. Description

This work shall consist of installing, maintaining, and removing stockpile/staging areas for the purpose of maintaining stable Materials and equipment storage areas as specified in the Contract Documents, or as directed by the City of Harrisonburg.

2. Materials

A. Geotextile fabric as specified in the Contract Documents., <u>if deemed necessary and required by the City</u>.

B. Hardwood Mats, if deemed necessary and required by the City.

C. Silt Fence as specified in the Contract Documents.

3. Construction

A. Installation

1. Hardwood Mats shall be installed by the contractor within active stockpile/staging areas during the tree removal stage as specified in the Contract Documents, or as directed by the City of Harrisonburg. Installation of Hardwood Mats shall be installed concurrently so that equipment used for specified tree removal within active stockpile/staging areas shall travel on top of installed Hardwood Mats.

2. Hardwood Mats shall be installed according to the detail provided in Contract Documents. Geotextile fabric must be installed under and extend a minimum of 4 feet around all active stockpile/staging areas.

3. Install Hardwood Mats in the areas designated in the Contract Documents. Place the hardwood mats such that the timbers run parallel with the vehicle tread (to increase durability). Subsequent mats shall be installed such that the ends and sides abut one another.

4. Silt fence shall be installed around the downhill end of the stockpile/staging areas as specified in the Erosion and Sediment Control Plan and Details presented in the Contract Documents, or as directed by the City of Harrisonburg.

5. Any erodible Materials left in stockpile areas shall be mulched or covered prior to rain events.

B. Clean-up

1. Remove Hardwood Mats starting with the mat farthest into the stockpile/staging areas and work back to the access path.

2. As mats are removed grade shall be returned to the pre-Construction grade and areas of vegetation shall be replanted according to the planting plan and vegetation schedule presented in the Contract Documents.

4. Measurement and Payment

Stockpile/staging areas shall not be measured and payment for shall be incidental to Special Provision 1 -Mobilization.

Special Provision 8:Clearing & Grubbing

1. Description

This work shall consist of clearing, grubbing, removing, and disposing of vegetation, debris, and other objects within the Construction limits, except for vegetation and objects that are designated to be preserved, protected, or removed in accordance with the requirements of other provisions of these specifications.

A. The Contractor shall be responsible for any and all damage to trees, shrubs, herbaceous plants, and wetlands located beyond the limit of disturbance which occurs from his/her operations during the life of the Contract. The Contractor shall fully restore, at his/her own expense, and to the satisfaction of the City of Harrisonburg and/or Engineer, any trees, shrubs, herbaceous plants, and wetlands that have been damaged or destroyed.

B. Tree removal shall only be done in accordance with Contract Documents or as directed by the City of Harrisonburg and/or Engineer. The Contractor shall only clear and grub as much of the proposed grading area that the Contractor can complete and stabilize within the same day. The Contractor shall install tree protection fencing and matting, as described in the Contract Documents, prior to any disturbance.

2. Measurement and Payment

Clearing and grubbing shall be measured and paid for on a per acre (AC) basis. The payment will be full compensation for clearing, grubbing, and disposal of cleared and grubbed Materials. Payment shall include all Materials, labor, equipment, tools, stockpiling, and incidentals necessary to complete the work as specified in the Contract Documents, or as directed by the City of Harrisonburg and/or Engineer.

Section 3: Stream Construction

Special Provision 9:Earthwork

1. Description

Earthwork shall consist of performing all operations necessary to excavate and transport all cut and fill material, process material as required, and deposit, place, and compact material in accordance with the grades as shown on the plans, or as directed by the City of Harrisonburg and/or Engineer. Such earthwork shall include the loosening, removing, loading, transporting, stockpiling, depositing, and compacting of all Materials (including topsoil) wet and dry, as required for the purposes of completing the work. Earthwork also includes the offsite disposal/haul off of excess cut material that meets the criteria of excavated material as specified below. Every effort shall be made to minimize soil compaction in planting areas.

2. Materials

A. Excavated material shall consist of material excavated within the limits of the project. If material will not meet the criteria below for suitable fill it will be hauled off to an approved disposal site at the expense of the Contractor. If excavated material meets the criteria specified below for fill material, then it shall be stockpiled and used as necessary with furnished fill material.

B. Furnished fill material shall consist of material used to raise the site elevations to those specified in the grading plan. If sufficient satisfactory soil Materials for use as earth fill are not available from onsite excavations, it shall be the Contractor's responsibility to provide suitable earth fill material. Soils sufficient for use as earth fill include ASTM D 2487 Soil Classification Groups GW, GP, GM, GC, SW, SP, SM, and SC, or combination of these groups, or as approved by the City of Harrisonburg and/or Engineer. Earth fill shall be free of debris, waste, frozen Materials, vegetation, invasive species, pathogens, and any other deleterious matter.

C. Class A topsoil – See Special Provision – Topsoil

D. Class B topsoil – See Special Provision - Topsoil

3. Construction

A. Existing elevations and grades may have changed since the original survey was completed due to erosion, sediment accretion, or fill. It is the Contractor's responsibility to confirm existing grades and adjust earthwork as necessary at no additional cost to the City of Harrisonburg and/or Engineer.

B. All erosion and sediment control devices shall be in place prior to commencement of earthwork activities.

C. All excess material shall be removed from the site and disposed of at a properly

permitted disposal site at the expense of the Contractor.

4. Measurement and Payment

Earthwork will be paid for through two line items, Furnished Fill Material and Excavated Material (Haul Off) and measured on a per cubic yard (CY) basis. The Contractor shall will be paid in full compensation for all earthwork required to install the measures in accordance with the plans and specifications, including, but not limited to, accessing the site, light bank grading, channel bank excavation, over excavating unsuitable Materials, placing and compacting select material, placing topsoil, mixing topsoil, backfilling undercut areas, channel bank sloping, hauling of suitable excavated material to locations within the project limits for use, and hauling of suitable or unsuitable excavated material to a satisfactory off-site location for disposal.

Special Provision 10: Natural Fiber Matting

1. Description

This work shall consist of furnishing, transporting, maintaining, stockpiling, and properly installing natural fiber matting (secured with biodegradable stakes) on areas of stream bank grading and soil lifts which will not receive additional stabilization techniques, and at other locations designated in the Construction Drawings, or as directed by the City of Harrisonburg and/or Engineer.

2. Materials

Natural fiber matting for both stream bank grading and soil lifts shall meet the specifications shown in the Construction plans. Biodegradable stakes used to secure natural matting shall be made of native hardwood species and meet the specifications shown in the Construction Drawings. The source of natural fiber matting and stakes shall be submitted to the City of Harrisonburg and/or Engineer for review and approval prior to beginning Construction. Installation shall be in accordance with the Construction Drawings, or as directed by the City of Harrisonburg and/or Engineer.

3. Construction

A. The Contractor shall place natural fiber matting along the stream edge as shown in the Construction Documents or as directed by the City of Harrisonburg and/or Engineer. The natural fiber matting shall be unrolled along the top of bank and across the full width of any bankfull or low flow benches, if present and shown in the Construction Drawings. Matting shall be placed in full contact with the soil. All exterior edges (those edges not overlapping with an adjacent natural fiber matting roll) shall be "keyed" into the ground a minimum of 6 inches in such a way that a seamless grade is created (<u>no humps or bulges in fabric will be permitted</u>).

B. Natural fiber matting edges (matting installed side by side at any given elevation) shall be overlapped a minimum of 6 inches and staked down using biodegradable stakes at maximum distance apart of 3-feet.

C. Natural fiber matting ends (where upstream roll abuts downstream roll) shall be placed such that the upstream roll overlaps the downstream roll a minimum of 6 inches and staked down using biodegradable stakes at a maximum distance apat of 3-feet.

D. Natural fiber matting ends (matting installed where ends of matting abut in-stream structures) shall be 'keyed-in' a minimum of 6 inches in such a way that a seamless grade, or transition, is created. (No humps or bulges will be accepted.) These edge areas shall be staked as specified on Construction Drawings.

4. Measurement and Payment

Natural Fiber Matting, including biodegradable stakes, for stream bank grading and soil lifts shall be measured and paid for on a per square yard (SY) basis. Payment for natural fiber matting shall be full compensation for furnishing, transporting, maintaining, stockpiling, and properly installing all Materials, labor, equipment, tools, and incidentals necessary to complete the work as specified in the Construction Drawings, or as directed by the City of Harrisonburg and/or Engineer.

Special Provision 11: Geotextile Fabric

1. Description

This work shall consist of furnishing, transporting, maintaining, stockpiling, and properly installing Geotextile Fabric in the stream channel as specified in the Construction Drawings, or as directed by the City of Harrisonburg and/or Engineer.

2. Materials

Geotextile Fabric shall be Class D non-woven polypropylene. The fabric shall have a typical weight of 8 oz/sy (ASTM D-5261), apparent maximum opening size of 0.212 mm (ASTM D4751), minimum grab tensile strength of 120 lbs. (ASTM D-4632), and minimum puncture strength of 65 lbs. (ASTM D-4833). Specifications are also shown on plans.

3. Measurement and Payment

Payment for geotextile fabric shall be incidental to the installation of Boulder Cross Vanes, Log J-hooks, Boulder J-hooks, and Riffles as specified in the Contract Documents, or as directed by the City of Harrisonburg.

Special Provision 12: Stream Bed Material

1. Description

This work shall consist of furnishing, transporting, stockpiling, maintaining, and placing stream bed material to be utilized for Construction of Riffles, Boulder J-Hook, Boulder Cross Vanes, Boulder Step Pools, and at other locations as specified in the Construction Drawings, or as directed by the City of Harrisonburg and/or Engineer.

2. Materials

A. Stream bed material shall consist of natural field Boulder, natural river Boulder, or crushed Boulder. The stream bed material shall be sound, tough, dense, resistant to the action of air and water, and suitable in all respects for the purpose intended.

B. Source of stream bed material shall be from an approved mining operation with up-to-date regulatory permits and/or the project site. Stream bed material shall NOT be indiscriminately mined from active streams and rivers other than the project site.

C. Stream bed material shall be a mixture that matches as closely as possible the gradation provided in the Construction plans.

D. Stream bed material may be salvaged on-site. Salvaged material must be determined to meet as closely as possible the gradation provided in the Construction plans or mixed with imported material until it meets this gradation.

E. Samples of stream bed material, imported or salvaged, shall be reviewed and approved by the City of Harrisonburg and/or Engineer, prior to its use in the project. Any unsuitable material brought onsite shall be removed at the Contractor's expense.

3. Construction

The Contractor shall install stream bed material as specified in the Construction Drawings, or as directed by the City of Harrisonburg and/or Engineer.

4. Measurement and Payment

Payment for streambed material shall be incidental to the installation of Boulder Cross Vanes, Log J-hooks, Boulder J-hooks, and Riffles as specified in the Contract Documents, or as directed by the City of Harrisonburg.

Special Provision 13: Boulder Material

1. Description

This work shall consist of furnishing, transporting, stockpiling, maintaining, and placing of Boulder for the Imbricated Wall, Boulder Toe, Boulder Cross Vane, Boulder J-hook, and Boulder Step Pools as specified in the Construction Drawings, or as directed by the City of Harrisonburg and/or Engineer.

2. Materials

A. Boulder shall consist of angular flat boulders of appropriate color (e.g., green/gray, brown/gray, dark gray, and/or dark brown in color) obtained from an approved source. Boulder shall NOT be harvested from streams or rivers outside a commercial quarry operation. All boulder shall be free from laminations and weak cleavages, and shall not disintegrate from the action of air, salt water, or in handling and placing. Granular sedimentary boulder shall generally be unacceptable. Concrete shall not be considered as an alternative for boulders. White boulder is not acceptable.

B. Boulder sizes shall be as specified in the Construction Drawings for structures.

C. The boulder shall have a minimum unit weight of 160 pounds per cubic foot and meet the dimensions specified in the Construction Drawings.

D. The Contractor shall obtain from the quarry and submit to the City of Harrisonburg and/or Engineer a certificate verifying that the following meet all the above specifications – 1) Boulder, 2) Classification, 3) Weight per cubic foot, 4) Weight of boulder being supplied, and 5) Boulder quantity.

E. Due to the anticipated quarry preparatory time, and/or demand for the Boulder as specified in the Construction Drawings, it shall be the Contractor's responsibility to make all necessary arrangements with the source of supply in a timely fashion. This action shall ensure that the Contractor maintain an adequate supply of boulder material and that work shall not be unnecessarily delayed due to insufficient supply.

3. Construction

The Contractor shall install Boulder Material as specified in Construction Drawings.

4. Measurement and Payment

Payment for boulder material shall be incidental to the installation of Boulder Cross Vanes, Log J-hooks, Boulder J-hooks, and Riffles as specified in the Contract Documents, or as directed by the City of Harrisonburg.

Special Provision 14: Logs

1. Description

This work shall consist of furnishing, transporting, stockpiling, maintaining and placing of logs in Log Cross Vanes, Log J-hook, and Brush Toe as specified in the Contract Documents, or as directed by the City of Harrisonburg.

2. Materials

A. Logs shall consist of on-site hardwood trees harvested during the clearing and grubbing process or imported logs. Logs shall be green timber, free of branches (except as noted in the Contract Documents for in- stream woody debris, free of roots, and rotted areas. Logs shall be one solid piece extending the entire vane arm or sill length unless otherwise noted in Contract Documents.

B. Log sizes shall be as specified in the Contract Documents.

C. Any unsuitable material shall be removed at the Contractor's expense.

D. The Contractor shall not be granted an extension of time or extra compensation due to delay caused by sampling, testing, approval or disapproval of log material under the requirements of these Specifications. It shall be the contractor's responsibility to make all necessary arrangements to save on-site material during clearing and grubbing and to maintain an adequate supply of log material and that work shall not be unnecessarily delayed due to inadequate supply.

3. Construction

The Contractor shall install logs as specified in Construction Drawings.

4. Measurement and Payment

Payment for logs shall be incidental to the installation of Log Cross Vane, Log J-hook, and Brush Toe as specified in the Contract Documents, or as directed by the City of Harrisonburg.

Special Provision 15: Brush toe

1. Description

This work shall consist of furnishing, transporting, stockpiling, maintaining and placing of logs in Log Vanes, Log Steps, Log Vane Boulder J-Hooks, and Riffles as specified in the Contract Documents, or as directed by the City of Harrisonburg.

The work covered by this specification includes, but is not limited to, furnishing, stockpiling,placing, excavating, and maintaining approved rootwads, logs, brush material, natural fiber matting, live branch cuttings, and soil to be used in the Construction of the

Brush Toe structure, as specified in the Construction Drawings, or directed by the City and/or Engineer. Brush Toe is used to create stable, reinforced banks and undercut bank habitat.

2. Materials

A. Natural Fiber Matting

Natural Fiber Matting – See Special Provision Natural Fiber Matting and Contract Documents

B. Soil

Soil to be utilized for the Construction of the soil lift(s), shall meet the specification for Furnished Fill Material (See Engineering Plans).

C. Live branches

Live branches shall be as specified in the Contract Documents. shall be cut from fresh, green, healthy, dormant parent plants which are adapted to the site conditions when possible with the following guidelines; woody branches up to 1" in diameter and 3 to 5 feet (minimum) in length can be used for the Brush Toe. Live cut species types are indicated in the Construction details. Live branch cuttings shall be harvested within a 200-mile radius of the job site unless otherwise approved by the City and/or Engineer.

While plants are being transported to and from heeling-in beds, or are being distributed in planting beds, or are awaiting planting after distribution, the Contractor shall protect the plants from drying out by means of wet canvas, burlap, or straw, or by other means acceptable to the City and/or Engineer and appropriate to weather conditions and the length of time the roots will remain out of the ground. Live branches shall be oriented with the butt ends touching the soil in the back of each soil lift. If grading in the immediate area is completed during the dormant season, Brush Toe shall be installed immediately. If grading in the immediate area is completed during the growing season, the Brush Toe shall be planted with temporary seed and matting until the dormant season, at which time the Brush Toe shall be installed.

D. Brush and Log Material

This material shall consist of logs, rootwads, and all other wood debris from native hardwood species available onsite or imported from offsite.

3. Construction

The Contractor shall install logs as specified in Construction Drawings. The Contractor shall place rootwads, logs, brush material, natural fiber matting, soil, and live branches in locations shown on the plans, to the thickness, widths, and lengths shown on the plans and described in the details, or as directed by the City and/or Engineer. All rootwads, logs, brush material, coir fiber matting, live branch cuttings, and soil shall be placed to form an instream structure in accordance with the plans, neatly and uniformly, and shall meet the

approval of the City and/or Engineer.

4. Measurement and Payment

Brush Toe shall be measured and paid for on a per linear foot (LF) basis. Payment for brush toe shall be full compensation for furnishing, transporting, maintaining, stockpiling, and properly installing all Materials, labor, equipment, tools, and incidentals necessary to complete the work as specified in the Construction Drawings, or as directed by the City of Harrisonburg and/or Engineer.

Special Provision 16: Boulder Cross Vane

1. Description

This work shall consist of furnishing, stockpiling, transporting, installing and maintaining Boulder cross vanes (including modified [differing arm lengths] or stepped structures) within the stream channel as specified in the Contract Documents, or as directed by the City and/or Engineer.

2. Materials

A. Footer Boulder

Footer Boulder shall meet the Specifications for 'Boulder Material' contained in the Contract Documents. Footer Boulder consists of Boulder placed below the invert of the proposed channel to provide support for the top Boulder and prevent downstream scour.

B. Header (Top) Boulder

Top Boulder (header Boulder) shall meet the Specifications for 'Boulder Material' contained in the Contract Documents. Top Boulder consists of Boulder placed upon the footer Boulder.

C. Sill Boulder

Sill Boulder shall meet the Specifications for 'Boulder Material' contained in the Contract Documents. Sill Boulder consists of a single row of Boulder at the ends of the structure arms. These Boulders shall be installed flush with grade and extend into existing bank Materials in a direction perpendicular to main channel flow.

D. Geotextile Fabric

See Special Provision for Geotextile fabric and the Contract Documents.

E. Stream Bed Material

See Special Provision for Stream Bed Material –and the Contract Documents.

3. Construction

A. Installation

B. Boulder cross vanes shall be constructed in a "V" formation so that adjoining Boulders taper up in elevation towards the stream bank in a downstream direction. Contractor shall install structures per Construction details and stakeout information provided in the Contract Documents, and as directed by the City of Harrisonburg.

C. The footer Boulders shall be installed by excavating a trench to accommodate both the footer Boulders and a 2-foot area upstream. The bottom of all footer Boulders shall be below (typically 18" or as otherwise specified in Contract Documents) the elevation of the deepest part of the pool associated with the structure. In the event that bedrock is present in the area of installation, footer Boulder shall still be required unless approval for elimination of footer Boulder is obtained from the City of Harrisonburg. For example, where bedrock is friable and weathered and can be trenched, footer Boulder will be required. In areas where bedrock is resistant and blasting would be required, the City of Harrisonburg shall determine whether or not to eliminate the footer Boulder.

D. Geotextile fabric shall be placed in the bottom and upstream side of the trench across the entire structure. Footer Boulders shall be placed at the bottom and downstream side of the trench so that a minimum of one (1) foot of geotextile fabric lies under the Boulder. The Boulders shall abut one another. The top elevation of the footer Boulder placed at the centerline of the stream shall be flush with the proposed stream grade immediately below the step structure. Footer Boulders shall be firmly embedded into the trench bottom.

E. In the event that installation of the Boulder modified cross vane may damage tree roots, excavation shall be minimized. This may include reducing the length of the vane or eliminating trenching for footer Boulders and reinforced stream bed material. This decision shall be field determined and authorized by the City of Harrisonburg.

F. Top Boulders shall be placed tightly together (touching) on top of the footer Boulders, but offset slightly upstream (approx. 1/3rd of the Boulder diameter), as shown in the Construction details of the Contract Documents. Any remaining gaps present between the Boulders shall be filled-in ("chinked") with appropriately sized Boulder. The seams between top Boulders shall not line up with the seams of footer Boulders. Top Boulder elevations and locations shall be set according to the structure stakeout tables and structure points within the vertical and horizontal tolerances specified in the Contract Documents. The top elevation of the top Boulders placed at the thalweg shall be equal to the elevation of the thalweg, as specified on the profile and structure stakeout tables. Starting at the thalweg, adjacent Boulders shall taper up at a consistent slope (which is specified in stakeout and structure details) until reaching bankfull or an otherwise specified elevation. Consistent vane arm slope is important and undulations along the arm shall be unacceptable. Contractor shall install the structures as described in the stakeout locations and elevations specified in the Contract documents, and as directed by the City of Harrisbonburg.

6. The outermost top Boulders on each end of the cross vane shall be installed with at least one top Boulder buried into the stream bank. The trench behind the top Boulders shall be backfilled with reinforced stream bed material, taking care to fill all voids underneath and between the Boulders.

7. The trench behind the top Boulders shall be backfilled with reinforced stream bed material with the geotextile fabric between the reinforced stream bed material and top Boulders. The geotextile fabric shall be left so that it is visible above the top Boulders until the Boulders and reinforced stream bed material have been installed and inspected.

8. Sill Boulder consists of a single row of Boulder, underlain by geotextile fabric, beginning at the ends of the structure arms and extending into the floodplain or bankfull bench as shown in the grading plan of the Contract Documents or until extending fully across any fill areas, unless otherwise noted on the plan sheets or directed by the City of Harrisonburg. Sill Boulders shall be aligned perpendicular to the stream, with each Boulder abutted tightly against each other and the top face installed flush with proposed grade.

9. Reinforced stream bed material shall be placed to a depth of one (1) foot along the entire restored channel upstream and downstream of the Boulder modified cross vanes. Reinforced stream bed material shall be placed to the proposed invert elevation as shown in the Contract Documents.

10. After inspection, trim the geotextile fabric flush with the top Boulders and reinforced stream bed material.

B. Cleanup

1. Upon completion of work, reshape slopes and stream bottom to specified elevations.

2. Remove unsuitable and surplus Boulders and excavated Materials to fill areas or approved off-site locations.

4. Measurement and Payment

Payment for Boulder Cross Vanes shall be measured and paid for at the Contract unit price per each (EA). Payment for structure shall be full compensation for furnishing, transporting, maintaining, stockpiling, and properly installing all Materials, labor, equipment, tools, and incidentals necessary to complete the work as specified in the Construction Drawings, or as directed by the City of Harrisonburg and/or Engineer.

Special Provision 17: Log Cross Vane

1. Description

This work shall consist of furnishing, stockpiling, transporting, installing and maintaining log cross vanes (including modified [differing arm lengths] or stepped structures) within the stream channel as specified in the Contract Documents, or as directed by the City and/or Engineer.

2. Materials

A. Footer Log

Footer logs shall meet the Specifications for 'Logs' contained in the Contract Documents. Footer log consists of log placed below the invert of the proposed channel to provide support for the top log and prevent downstream scour.

B. Header (Top) Log

Top logs (header logs) shall meet the Specifications for 'Logs' contained in the Contract Documents. Top logs consists of log placed upon the footer log.

C. Sill Boulder

Sill Boulder shall meet the Specifications for 'Boulder Material' contained in the Contract Documents. Sill Boulder consists of a single row of Boulder at the ends of the structure arms. These Boulders shall be installed flush with grade and extend into existing bank Materials in a direction perpendicular to main channel flow.

D. Geotextile Fabric

Geotextile fabric shall meet the Specifications for 'Geotextile Fabric' contained in the Contract Documents.

E. Stream Bed Material

Stream bed material shall meet the Specifications for 'Stream Bed Material' contained in the Contract Documents.

3. Construction

A. Installation

1. Log cross vanes shall be constructed in a "V" formation so that header and footer logs taper up in elevation towards the stream bank in a downstream direction. Contractor shall install structures per Construction details and stakeout information provided in the Contract Documents, and as directed by the City and/or Engineer.

2. The footer logs shall be installed by excavating a trench to accommodate both the footer logs and a minimum 2-foot area upstream. The bottom of all footer logs shall be below (typically 18" or as otherwise specified in Contract Documents) the elevation of the deepest part of the pool associated with the structure. In the event that bedrock is present in the area of installation, footer logs shall still be required unless approval for elimination of footer log is obtained from the City. For example, where bedrock is friable and weathered and can be trenched, footer logs will be required. In areas where bedrock is resistant and blasting would be required, the City of Harrisonburg shall determine whether or not to eliminate the footer Boulder.

3. Geotextile fabric shall be placed in the bottom and upstream side of the trench across the entire structure. Footer logs shall be placed at the bottom and downstream side of the trench so that a minimum of one (1) foot of geotextile fabric lies under the Boulder. The logs shall abut one another. The top elevation of the footer log placed at the centerline of the stream shall be flush with the proposed stream grade immediately below the step structure. Footer logs shall be firmly embedded into the trench bottom.

4. In the event that installation of the log cross vane may damage tree roots, excavation shall be minimized. This may include reducing the length of the vane or eliminating trenching for footer logs and reinforced stream bed material. This decision shall be field determined and authorized by the City.

5. Top log shall be placed tightly together (touching) on top of the footer log, but offset slightly upstream (approx. 1/3rd of the log diameter), as shown in the Construction details of the Contract Documents. Top log elevations and locations shall be set according to the structure stakeout tables and structure points within the vertical and horizontal tolerances specified in the Contract Documents. The top elevation of the top logs placed at the thalweg shall be equal to the elevation of the thalweg, as specified on the profile and structure stakeout tables. Starting at the thalweg, log shall taper up at a consistent slope (which is specified in stakeout and structure details) until reaching bankfull or an otherwise specified elevation. Contractor shall install the structures as described in the stakeout locations and elevations specified in the Contract documents, and as directed by the City of Harrisbonburg.

6. The trench behind thelog shall be backfilled with stream bed material, taking care to fill all voids underneath and between the Boulders.

7. The trench behind the top log shall be backfilled with reinforced stream bed material with the geotextile fabric between the stream bed material and top Boulders. The geotextile fabric shall be left so that it is visible above the top Boulders until the Boulders and stream bed material have been installed and inspected.

8. Sill Boulder consists of a single row of Boulder, underlain by geotextile fabric, beginning at the ends of the structure arms and extending into the floodplain or bankfull bench as shown in the grading plan of the Contract Documents or until extending fully across any fill areas, unless otherwise noted on the plan sheets or directed by the City. Sill Boulders shall be aligned perpendicular to the stream, with

each Boulder abutted tightly against each other and the top face installed flush with proposed grade.

9. Stream bed material shall be placed to a depth of one (1) foot along the entire restored channel upstream and downstream of the log cross vanes. Stream bed material shall be placed to the proposed invert elevation as shown in the Contract Documents.

10. After inspection, trim the geotextile fabric flush with the top logs and stream bed material.

B. Cleanup

1. Upon completion of work, reshape slopes and stream bottom to specified elevations.

2. Remove unsuitable and surplus material and excavated Materials to fill areas or approved off-site locations.

4. Measurement and Payment

Log Cross Vanes shall be measured and paid for on a per each (EA) basis. Payment for log cross vanes shall be full compensation for furnishing, transporting, maintaining, stockpiling, and properly installing all Materials, labor, equipment, tools, and incidentals necessary to complete the work as specified in the Construction Drawings, or as directed by the City of Harrisonburg and/or Engineer.

Special Provision 18: Riffle

1. Description

This work shall consist of furnishing, stockpiling, transporting, and installing a riffle grade control within the stream channel, as specified in the Construction Drawings, or as directed by the City of Harrisonburg and/or Engineer.

2. Materials

A. Stone to construct the constructed riffle shall adhere to Special Provision – Stream Bed Material.

B. Logs and brush material used shall be any native hardwood species that are sound and free from decay, breakage, or other damages. Minimum diameter and minimum embedded length shall be in accordance with details on the plan set.

3. Construction

A. The Contractor shall construct riffles in the areas shown on the plans or as directed by the City of Harrisonburg and/or Engineer, to the thickness, widths, and lengths as shown on the plans and described in the details or directed by the City of Harrisonburg and/or

Engineer. All stone shall be placed to form an in-stream structure in accordance with the plans, neatly and uniformly, and shall meet the approval of the City of Harrisonburg and/or Engineer.

4. Measurement and Payment

Payment for Riffles shall be measured and paid for at the Contract unit price per each (EA). Payment for structure shall be full compensation for furnishing, transporting, maintaining, stockpiling, and properly installing all Materials, labor, equipment, tools, and incidentals necessary to complete the work as specified in the Construction Drawings, or as directed by the City of Harrisonburg and/or Engineer.

Special Provision 19: Cascade

1. Description

This work shall consist of furnishing, stockpiling, transporting, installing, and maintaining cascade structures within the stream channel, as specified in the Contract Documents, or as directed by the City and/or Engineer.

2. Materials

A. Boulder Material – See Special Provision

Refer to Boulder Dimension Tables in the Contract Documents.

B. Geotextile Fabric

Geotextile fabric shall meet the Specifications for Special Provision – Geotextile Fabric and as specified in the Construction Drawings.

C. Stream Bed Material

Stream Bed Material shall meet the specifications of Special Provision - Stream Bed Material and as specified in the Construction Drawings.

D. Fill Material – See Special Provision - Earthwork

3. Construction

A. Installation

Each cascade structure shall be constructed beginning at the downstream-most extent of the structure. In plan view, the boulders that form the toe and crest cross sections shall follow a parabolic shape to the extent possible, with the center of the arc set in the lowest point (thalweg) along the length of stream channel. Refer to typical sections for width of boulders across channel as shown on Contract

Documents. Boulders shall be interlocked and shall not rock or rotate in position once installed. Boulder placement shall be random in nature as approved by the Engineer.

In areas of cut, fill material under the cascade is not needed. In areas of fill, the existing stream channel shall be filled in 8-inch lifts of fill material to meet subgrade elevation necessary to place cascade materials at the required depth to meet final elevation as shown in the Contract Documents.

In the event that resistant bedrock is present in the area of installation, the bedrock shall be used instead of footer and splash boulders or as directed by the Engineer. If friable and weathered bedrock is present and can be trenched, footer and splash boulders will still be required.

In the event where installation of the structure may damage tree roots, excavation shall be minimized. This may include reducing the length of the structure, minimal root pruning, removing the tree, or eliminating trenching for footer rocks. This decision shall be field determined and authorized by locality representative or engineer.

Excavate a trench into the existing stream bed substrate or fill material at the downstream-most end of the structure to place Geotextile, boulders and stream bed material for the toe cross section. Install Geotextile in the toe cross section on the upstream side of the cascade and footer boulders along the face of the structure and below all splash boulders. Install Geotextile to extend to the height of the cascade boulder and the width of the structure as shown in the Contract Documents. Place cascade, footer, and splash boulders on top of the Geotextile as shown in the Contract Documents. The top of the splash boulder shall be flush with the pool tie-in elevation shown on the profile in the Contract Documents. Place cascade boulders at the thalweg lower than other boulders to form a low flow channel as consistent with the typical cross sections. Starting at the thalweg, adjacent boulders shall taper up to the top of the bank in a parabolic shape. The end cascade boulders shall extend to the tie-out boulders which will extend a minimum of one boulder length (A-axis) into the existing stream bank as shown on Construction Drawings. Where tie-out boulders conflict with existing tree roots, bedrock, or utilities, tie-out boulders may be eliminated or adjusted at the direction of Engineer. Chink and fill all voids with stream bed material using the largest possible stones. Cut any excess Geotextile flush to boulders.

Once the toe cross section has been placed and the subgrade is prepared, place cascade boulders between the toe cross section and the upstream pool at a 12-24 inch spacing. Interlocking boulders shall be placed in concentration at cascade crest and toe, between staggered cascade boulders as shown on Construction Drawings.

Backfill matrix of boulders by installing stream bed material along the cascade as shown in the Construction Documents. To meet proposed grade of the cascade, stream bed material shall be installed in alternating lifts or layers of the two size components of the final steam bed material mixture. Cobble shall be placed first followed by the gravel to allow proper filling of void spaces in each lift using the following steps:

- Place the cobble gradation in a lift (to form a framework) with thickness equal to the largest stone in the gradation. Do not drop stones from a height greater than 2 feet above the finished subgrade.
- Place the gravel gradation on top of each lift (to fill in the void spaces of the framework) and use water to wash the fines into the voids of the stone layer. Apply water sufficient to assure that all void spaces are completely filled with fines.
- Dewater as required during washing so water does not pool in the placement area and wash water does not discharge into the stream.
- Remove any excess fine material (e.g., sand) prior to placing the next lift of the cobble material to assure stone to stone contact and that subsequent lift does not rest on fines.

The depth of stream bed material shall be 18 inches minimum, unless otherwise specified or directed by the Engineer. The grading of stream bed material shall be controlled by visual inspection or as directed by Engineer. Stream bed material shall meet a finish grade tolerance of +/- 2 inches to allow for larger cobble to protrude above the stated finish grade.

The cobble component of stream bed material shall be used to form a cobble apron at the downstream end. The cobble apron shall extend a minimum of 2 feet downstream of the splash boulders to form an apron and tie into the pool. The apron depth shall be a minimum of 1.5 feet before tapering into the pool.

4. Measurement and Payment

Payment for Cascades shall be measured and paid for at the Contract unit price per each (EA). Payment for structure shall be full compensation for furnishing, transporting, maintaining, stockpiling, and properly installing all Materials, labor, equipment, tools, and incidentals necessary to complete the work as specified in the Construction Drawings, or as directed by the City of Harrisonburg and/or Engineer.

Special Provision 20: Boulder J-Hook

1. Description

The work covered by this specification includes, but is not limited to furnishing, stockpiling, placing, excavating, and maintaining all approved stone, geotextile fabric, logs, boulders, and soil to be utilized to construct the Boulder J-Hook.

2. Materials

Footer Boulder - Footer boulders shall meet the specifications for Boulder Material Special Provision. Footer boulder consists of boulder placed below the invert of the proposed channel to provide support for the top boulder and prevent downstream scour.

Top Boulder (Header) - Top boulders shall meet the specifications for Boulder Special Provision. Top boulder consists of boulder placed upon the footer boulder.

Geotextile Fabric - Geotextile fabric shall meet the Specifications for Geotextile Fabric Special Provision and as specified in the Construction Drawings. Any changes to the type of Geotextile Fabric utilized for the Log Vane Boulder J-Hook Construction shall be approved by the City of Harrisonburg and/or engineer.

Stream Bed Material – Stream bed material shall meet the specifications of Stream bed material Special Provision and as specified in the Construction Drawings.

3. Construction

A trench shall be dug in such a manner that the hook footer boulders and a minimum of 95 percent of the hook header boulders are buried beneath the bed surface elevation in locations specified on the Construction Drawings. Refer to the Construction Drawings for exact installation guide and locations to be installed.

Hook footer boulders shall be placed first with header boulders placed on top prior to backfilling the trench.

For the vane, footer boulders shall be placed first, followed by header boulders, and positioned such that they abut tightly against the hook boulders (flat smooth surfaces that fit together). The vane arm shall slope upward from the point of contact with the hook boulders until it ties into the outside bank as specified by Construction Drawings.

If bedrock is present at the channel invert, footer boulders shall still be required unless approval for elimination of footer boulder is obtained from the City of Harrisonburg. For example, where bedrock is friable and weathered and can be trenched, footer boulders will be required. In areas where bedrock is resistant and blasting would be required, the City of Harrisonburg shall determine whether to eliminate footer boulders.

If other constraints besides bedrock are encountered which prohibit the structure installation to meet design specifications, adjustments/modifications will be considered. This may include reducing the length of the structure or eliminating trenching for footer boulders and alluvium backfill. This decision shall be field determined and authorized by the City of Harrisonburg in consultation with the Design Engineer.

Geotextile Fabric shall be placed on the upstream side of structure to prevent the washout of sediment through boulder gaps. Fabric shall be secured to the header boulder along the vane with backfill material and stone as shown in Construction detail. Fabric shall extend from the top of the header boulder, down to the bottom of the trench used for structure backfill, and upstream of the structure no less than 4' along the entire length of the structure. Gaps between boulders shall be filled with stone until plugged. Geotextile Fabric shall be cut neatly at the elevation of backfill.

The area between the streambank and the upstream side of the structure shall be backfilled

with stone (see Stone Special Provision).

The City of Harrisonburg may adjust the number and placement of structures during Construction. Such variations in quantity will not be considered as alterations in the details of Construction or a change in the character of the work.

4. Measurement and Payment

Payment for Boulder J-Hook structures shall be measured and paid for on a per each (EA) basis. Payment for boulder j-hook structures shall be full compensation for furnishing, transporting, maintaining, stockpiling, and properly installing all Materials, labor, equipment, tools, and incidentals necessary to complete the work as specified in the Construction Drawings, or as directed by the City of Harrisonburg and/or Engineer.

Special Provision 21: Imbricated Wall

1. Description

This work shall consist of furnishing, transporting, stockpiling, installing and maintaining imbricated walls along the stream channel, as specified in the Contract Documents, or as directed by the City of Harrisonburg and/or engineer.

2. Materials

Footer boulder shall meet the specifications for 'Boulder Material' contained in the Contract Documents. Footer boulder consists of boulder placed below the invert of the proposed channel or underneath top boulders (off- channel) to provide support for the top boulder and prevent downstream/toe scour.

A. Top Boulders (Header)

Top boulder (header boulder) shall meet the specifications for 'Boulder Material' contained in the Contract Documents. Top boulder consists of the row(s) of boulder placed upon and above footer boulders.

B. Geotextile Fabric

Geotextile fabric shall meet the Specifications for 'Geotextile Fabric' contained in the Contract Documents.

3. Construction

A. Installation

1. The imbricated wall placement shall be constructed along stream banks or in off-channel areas on steep slopes as shown in the Contract Documents.

2. Excavate a trench along the base of the wall. The trench shall be of sufficient depth and

size to accommodate the footer boulders such that when installed, they are below the invert of the stream thalweg (if along the channel) or sufficiently deep to allow placement of top boulders at the specified final elevation (off-channel areas). Minimize over-excavation as much as possible.

3. Place one end of the geotextile fabric in the footer trench. The geotextile fabric shall be cut to a sufficient size such that it will extend from the bottom of the footer trench to the top of the back side of the imbricated wall.

4. Place footer boulders in footer trench directly on top of the geotextile fabric.

5. Place top boulders on footer boulders allowing batter or setback. Each row of top boulders shall be offset, or setback, six (6) inches (min.) from the previous lower row. Top boulders shall be placed so that they lean on the footer boulders and fit tightly against each other (touching). Any remaining gaps present between the boulders shall be chinked and filled with appropriately sized boulder. The seams between top boulders shall not line up with the seams between the footer boulders. Continue placing rows of top boulders until elevation specified in the Contract Documents is achieved.

6. Imbricated walls shall be keyed into the bank by at least two boulders at the upstream and downstream end. Boulders used to key in wall to bank shall include footer boulders.

7. Once the specified imbricated wall height is achieved or high enough to allow a 3:1 bank grade to tie into existing grade, pull the geotextile fabric up against the fill-side or back side of the wall and lay it over the top boulders.

8. Back fill behind the imbricated wall with suitable fill which has been approved by the City of Harrisonburg.

9. Trim any excess geotextile fabric such that it is not visible.

B. Clean-up

1. Upon completion of work, reshape slopes and stream bottom to specified elevations.

2. Remove unsuitable and surplus boulders and excavated Materials to approved off-site locations.

4. Measurement and Payment

Payment for Imbricated Wall shall be measured and paid for at on a linear foot (LF) basis. Payment for structure shall be full compensation for furnishing, transporting, maintaining, stockpiling, and properly installing all Materials, labor, equipment, tools, and incidentals necessary to complete the work as specified in the Construction Drawings, or as directed by the City of Harrisonburg and/or Engineer.

Special Provision 22: Boulder Toe with Soil Lift

1. Description

This work shall consist of furnishing, transporting, stockpiling, installing and maintaining Boulder toe with soil lifts along the stream channel, as specified in the Contract Documents, or as directed by the City of Harrisonburg and/or engineer.

2. Materials

A. Natural Fiber Matting

Natural Fiber Matting – See Special Provision – Natural Fiber Matting and Contract Documents.

B. Soil

Soil to be utilized for the Construction of the soil lift(s), shall meet the specification for Furnished Fill Material (See Special Provision - Earthwork).

C. Live branches

Live branches shall be as specified in the Contract Documents. shall be cut from fresh, green, healthy, dormant parent plants which are adapted to the site conditions when possible with the following guidelines; woody branches up to 1" in diameter and 3 to 5 feet (minimum) in length can be used for the Brush Toe. Live cut species types are indicated in the Construction details. Live branch cuttings shall be harvested within a 200-mile radius of the job site unless otherwise approved by the City and/or Engineer.

While plants are being transported to and from heeling-in beds, or are being distributed in planting beds, or are awaiting planting after distribution, the Contractor shall protect the plants from drying out by means of wet canvas, burlap, or straw, or by other means acceptable to the City and/or Engineer and appropriate to weather conditions and the length of time the roots will remain out of the ground. Live branches shall be oriented with the butt ends touching the soil in the back of each soil lift.

D. Herbaceous Plugs
Herbaceous Plugs – See Special Provision and Contractor Documents.

E. Footer boulder shall meet the specifications for 'Boulder Material' contained in the Contract Documents. Footer boulder consists of boulder placed below the invert of the proposed channel or underneath top boulders (off- channel) to provide support for the top boulder and prevent downstream/toe scour.

F. Top Boulders (Header)

Top boulder (header boulder) shall meet the specifications for 'Boulder Material' contained in the Contract Documents. Top boulder consists of the row(s) of boulder placed upon and

above footer boulders.

G. Geotextile Fabric

Geotextile fabric shall meet the Specifications for 'Geotextile Fabric' contained in the Contract Documents.

3. Construction

A. Installation

1. The boulder toe with soil lift placement shall be constructed along stream banks or in as shown in the Contract Documents.

2. Excavate a trench along the base of the boulder toe. The trench shall be of sufficient depth and size to accommodate the footer boulders such that when installed, they are below the invert of the stream thalweg (if along the channel) or sufficiently deep to allow placement of top boulders at the specified final elevation (off-channel areas). Minimize over-excavation as much as possible.

3. Place one end of the geotextile fabric in the footer trench. The geotextile fabric shall be cut to a sufficient size such that it will extend from the bottom of the footer trench to the top of the back side of the imbricated wall.

4. Place footer boulders in footer trench directly on top of the geotextile fabric.

5. Place top boulders on footer boulders allowing batter or setback. Each row of top boulders shall be offset, or setback, six (6) inches (min.) from the previous lower row. Top boulders shall be placed so that they lean on the footer boulders and fit tightly against each other (touching). Any remaining gaps present between the boulders shall be chinked and filled with appropriately sized boulder. The seams between top boulders shall not line up with the seams between the footer boulders. Continue placing rows of top boulders until elevation specified in the Contract Documents is achieved.

6. Imbricated walls shall be keyed into the bank by at least two boulders at the upstream and downstream end. Boulders used to key in wall to bank shall include footer boulders.

7. Once the specified imbricated wall height is achieved or high enough to allow a 3:1 bank grade to tie into existing grade, pull the geotextile fabric up against the fill-side or back side of the wall and lay it over the top boulders.

8. Back fill behind the imbricated wall with suitable fill which has been approved by the City of Harrisonburg.

9. Trim any excess geotextile fabric such that it is not visible.

10. Install soil lifts in locations as shown on plans to the thickness, width, and lengths specified on the plans and described in the details or as directed by and/or Engineer.

4. Measurement and Payment

Payment for Boulder Toe with Soil Lift shall be measured and paid for at on a linear foot (LF) basis. Payment for structure shall be full compensation for furnishing, transporting, maintaining, stockpiling, and properly installing all Materials, labor, equipment, tools, and incidentals necessary to complete the work as specified in the Construction Drawings, or as directed by the City of Harrisonburg and/or Engineer.

Section 4: Infrastructure

Special Provision 23: Culvert Removal & Stormwater Infrastructure Installation

1. Description

This work shall consist of cutting the existing 15" CMP, installation of manhole, and 15" HDPE and installing a new 15" HDPE pipe as specified in the Construction Drawings, or as directed by the City of Harrisonburg and/or Engineer.

2. Materials

Materials are to be as specified in the associated details and by reference Section 302 of the VDOT Road and Bridge Standards (latest version).

Certification from the manufacturer is required for each shipment of precast units. Provide a copy of the certification to the Engineer and to the City of Harrisonburg.

3. Construction

A. Installation
   1. Cut existing 15" CMP at location indicated.
   2. Install B-2 base.
   3. Install MH-1 and IC-2 (or approved local equivalent cover).
   4. Install 15" HDPE according to PB-1 and as directed by the Engineer.

B. Cleanup
   1. Remove and dispose of 15" CMP at an approved facility.
   2. Dispose of any superfluous debris or material from installation.

4. Measurement and Payment

Culvert Removal and Stormwater Infrastructure Installation shall be measured and paid for at the contract unit price per linear foot (LF) of culvert removed and replaced installed. Payment shall be full compensation for the transport of all Materials, excavation, installation, and maintenance, and for all material, labor, equipment, tools, stockpiling, and

incidentals necessary to complete the work as specified in the Construction Drawings, or as directed by the City of Harrisonburg and/or Engineer.

Special Provision 24: Joint Utility Duct Bank

1. Description

This work shall consist of installing approximately 120 LF of joint utility ductbank and pullboxes as specified in the Construction Drawings, or as directed by the City of Harrisonburg and/or Engineer.

2. Materials

A. Underground conduit shall be polyvinyl chloride, Schedule 40, UL rated or approved equal.

B. Pull boxes shall be 36"x36" Quazite Model # PG3636BA36 open bottom box with model # PG3636HA00 heavy duty with 2 bolt cover, or approved equal.

C. All conduit and fittings shall be solvent cemented in applications in accordance with instructions from the manufacturer.

D. Material shall comply to NEMA Specification TC-2, TC-3, UL-514, and UL-651 (Standard for rigid nonmetallic conduit).

E. Conduit shall be made from polyvinyl chloride C-300 compound which includes inert modifiers to improve weatherability and heat distortion. Clean rework material, generated by the manufacturer's own conduit production, may be used by the same manufacturer, provided the end products meet the requirements of this specification. Conduit fittings and cement shall be produced by the same manufacturer to assure system integrity.

F. Conduit and fittings shall be tested in accordance with the testing requirements defined in NEMA TC-3, UL-651 and UL-514 (fittings). The acceptance criteria shall be as given in the same standards. All conduit and fittings shall be solvent cemented in applications in accordance with instructions from the manufacturer.

G. Thread lubricant/sealant shall be applied to all screw thread joints in raceway and outlet box systems and shall be Crouse-Hinds type STL except, when required on joints for heat producing elements such as lighting fixtures, it shall be Crouse-Hinds type HTL.

H. Contractor shall provide No. 14 galvanized iron or 5/32" polyethylene rope with 3' of slack at each end, in all empty conduits. Pull string shall have minimum 200 lb tensile strength.

I. Conduit joints shall be staggered by rows and layers to provide a duct line of maximum

strength.

3. Construction

A. Installation

1. The arrangement of the conduit shall be as indicated on the Construction Drawings.
2. Conduit shall have minimum 2" spacing.
3. Long sweep 90 degree bends shall be used when turning up at pull boxes. No true 90 degree turns will be allowed.
4. Contractor shall install pull string in all conduit with minimum 3' of slack at each end.
5. All conduit shall be bedded in minimum 4" of stone dust bedding.
6. Contractor shall backfill conduit to minimum 6" above top of largest conduit with flowable fill.
7. Depth of cover over top of duct bank shall be minimum 18"
8. Final depth of trench will be driven by required cover and number, size and space of conduit.

B. Cleanup

1. Upon completion of ductbank installation, contractor shall return site to former state.
2. Fill excavated areas to finished grade, which will provide adequate surface runoff, generally 4 inches when compacted to 75% maximum density at optimum moisture. Lightly scarify the surface to provide a smooth, loosened seedbed.
3. Hand broadcast seeding at a rate of 5 lbs. per 1000 sf. Rake seed into soil with broom rake. Overlap new seeding into areas of existing turf.
4. Apply fertilizer at 1lb. of (N)/1000s.f. (10lbs. blended material/1000 s.f.) for Hand-seeding application.
5. Seeded areas must have a relatively uniform stand of grass with no bare spots over 6" square at the time of substantial completion. Reseed at the original rate and fertilize with 10-20-20 at the rate of 10lbs. per 1,000 square feet of blended materials. All areas failing to vigorously establish within 90 days after germination or one growing season (whichever is longest), for any reason whatsoever, shall be redone at the Contractor's expense.
6. All other site features either damaged or destroyed during the execution of this contract shall be repaired to the satisfaction of the Engineer or to the installation specifications of the manufacturer of the approved replacement item. These include but are not limited to walls, sidewalks, curbs, stairways, driveways, etc. Replacement of damaged site features shall be in accordance with all project standards and specifications.

4. Measurement and Payment

Joint Utility Duct Bank shall be measured and paid for at the contract unit price per linear foot (LF) installed. Payment shall be full compensation for the transport of all Materials, excavation, installation, and maintenance, and for all material, labor, equipment, tools,

stockpiling, and incidentals necessary to complete the work as specified in the Construction Drawings, or as directed by the City of Harrisonburg and/or Engineer.

Section 5: Planting

Special Provision 25: Topsoil

1. Description

This work shall consist of furnishing and placing topsoil as specified in the Construction Drawings, or as directed by the City of Harrisonburg and/or Engineer. Contractor shall provide documentation of furnished topsoil to the City of Harrisonburg and/or Engineer for approval.

2. Materials

A. Topsoil furnished by the Contractor shall consist of friable surface soil reasonably free of grass, roots, weeds, sticks, stones, or other foreign Materials. The soil shall have a soil acidity range between a pH 5.0 and pH 7.0.

B. Class A topsoil shall consist of material salvaged on-site during excavation and shall consist of the original layer of the soil profile formed under natural conditions, technically defined as the "A" horizon. It shall be free from refuse and any other Materials toxic to plant growth and subsoil, stumps, viable noxious weeds, roots, brush, Boulders, clay lumps, or similar objects larger than 2 inches in any dimension.

C. Class B topsoil shall be topsoil furnished from sources outside the project limits and shall be the original top layer of a soil profile formed under natural conditions, technically defined as the "A" horizon or a mixed material meeting the following specifications. Class B topsoil shall be a "sandy loam," "loamy sand," or "sandy clay loam" soil as defined by the USDA Soil Textural Classification System with an organic matter content greater than 10%, or as approved in writing by the City of Harrisonburg and/or Engineer. Material shall be free from refuse and any other Materials toxic to plant growth and subsoil, stumps, viable noxious weeds, roots, brush, Boulders, clay lumps, or similar objects larger than 2 inches in any dimension. Topsoil shall be sourced responsibly from producers included in the Qualified Products List maintained by the Administration for Furnished Topsoil.

Excess topsoil shall become the responsibility of the Contractor and shall be completely removed from the project site prior to final site inspection and approval of the project.

3. Construction

A. Prior to the start of placing topsoil, all grass, weeds, brush, stumps, and other objectionable material shall be removed from the surface of stockpiles.

B. Placing and spreading of topsoil shall not be done when the ground is frozen, excessively wet, or otherwise in a condition detrimental to the work. Furnished topsoil

shall be placed, spread, and maintained over the areas designated to a depth of at least 6 inches. After settlement, the completed work shall be in conformance with the thickness, lines, grades, and elevations specified in the Construction Drawings.

C. Surfaces designated to be covered shall be lightly scarified just prior to the spreading operation. Compaction of topsoil will not be required. After placement is completed, the surface of the topsoil shall be finished to a reasonably smooth surface.

D. The Contractor shall completely prepare and finish the surface of all areas to be covered with topsoil as specified in the Construction Drawings.

E. Permanent Seeding (see Special Provision Permanent Seeding) should be carried out simultaneously to prevent excessive and undesirable soil compaction.

4. Measurement and Payment

Topsoil shall be measured and paid for at the contract unit price per cubic yard (CY) of topsoil installed. Payment shall be full compensation for the transport of all Materials, excavation, installation, and maintenance of topsoil, and for all material, labor, equipment, tools, stockpiling, and incidentals necessary to complete the work as specified in the Construction Drawings, or as directed by the City of Harrisonburg and/or Engineer.

Special Provision 26: Compost

1. Description

This work shall consist of furnishing and placing compost as specified in the Construction Drawings, or as directed by the City of Harrisonburg and/or Engineer. Contractor shall provide documentation of furnished copost to the City of Harrisonburg and/or Engineer for approval.

2. Materials

A. The compost shall be the result of the biological degradation and transformation of plant derived Materials under conditions that promote anaerobic decomposition. The material shall be well composted, free of viable weed seeds, and stable with regard to oxygen consumption and carbon dioxide generation. The compost shall have a moisture content that has no visible free water or dust produced when handling the material. It shall meet the following criteria, as reported by the U.S. Composting Council STA Compost Technical Data Sheet provided by the vendor:

1. 100% of the material must pass through a half inch screen
2. The pH of the material shall be between 6 and 8
3. Manufactured inert material (plastic, concrete, ceramics, metal, etc.) shall be less than 1.0% by weight
4. The organic matter content shall be between 35% and 65%
5. Soluble salt content shall be less than 6.0 mmhos/cm

6. Maturity should be greater than 80%
7. Stability shall be 7 or less Carbon/nitrogen ratio shall be less than 25:1
8. Trace metal test result = "pass"
9. The compost must have a dry bulk density ranging from 40 to 50 lbs./cu. ft3

3. Construction

A. Prior to the start of placing compost, all weeds, brush, stumps, and other objectionable material shall be removed from the surface of stockpiles.

B. Placing and spreading of compost shall not be done when the ground is frozen, excessively wet, or otherwise in a condition detrimental to the work.

C. Prior to the placement of topsoil when the subsoil is at final grade, surfaces designated to be covered shall be tilled to a minimum depth of 8". A 6" lift of compost shall be placed over the tilled areas and tilled into the subsoil. This area shall be worked until the subsoil and compost are well blended. The area does not require compaction, but may be tamped or lightly pressed to assist with soil stability.

D. The topsoil noted above in Special Provision-Topsoil shall also receive an amendment of compost, either mixing prior to installation or tilled in after the placement of topsoil. An equivalent 3" lift of compost shall be added to the topsoil layer and shall be thoroughly mixed.

4. Measurement and Payment

Compost shall be measured and paid for at the contract unit price per cubic yard (CY) of compost installed. Payment shall be full compensation for the transport of all Materials, excavation, installation, and maintenance of compost, and for all material, labor, equipment, tools, stockpiling, and incidentals necessary to complete the work as specified in the Construction Drawings, or as directed by the City of Harrisonburg and/or Engineer.

Special Provision 27: Planting Trees, Shrubs, & Herbaceous Plugs

1. Description

A. This work shall consist of furnishing, transporting, storing, and installing bare roots, herbaceous plugs, and landscape stone to complete the work for the planting plan as specified in the Construction Drawings, or as directed by City of Harrisonburg and/or Engineer.

B. Prior to start of work, the Contractor shall submit a proposed planting schedule, including species and quantities, anticipated planting dates, and the source of plant material to the City of Harrisonburg and/or Engineer for review. No work shall be performed until this information has been reviewed and approved by the City of Harrisonburg and/or Engineer.

C. The City of Harrisonburg and/or Engineer may request the Contractor to stake the location of individual plants and landscape stone within the approved Planting Zones.

D. The Contractor shall coordinate planting with the City of Harrisonburg and/or Engineer.

2. Materials

A. Plant Material

1. All plant material shall conform to the current issue of the American Standard for Nursery Stock published by the American Association of Nurserymen.
2. Plant Materials must be selected from certified nurseries that have been inspected by state and/or federal agencies. Nursery inspection certificates shall be furnished to the City of Harrisonburg and/or Engineer upon request.
3. The nursery supply source shall certify that the origin of the seeds from which the trees, shrubs, and grasses were produced is Hardiness Zone 6 or 7, east of the Mississippi River. Stock from different zones may be accepted, subject to approval by the City of Harrisonburg and/or Engineer.
4. Plant material collected from the wild is prohibited unless approved by City of Harrisonburg and Consultant.
5. Container grown stock shall have been grown in a container long enough for the root system to have developed sufficiently to hold its soil. Roots shall visibly extend to the inside face of the growing container. All container grown plants shall be grouped and kept moist and cool until they are planted. Plants left to dry in the sun prior to planting may be rejected on-site by the Inspector.
6. Bare Root grown stock shall be freshly dug. The packing material must be moist when delivered to the site. All bare root plants shall be dormant when planted.
7. The City of Harrisonburg and/or Engineer may reject plants damaged in handling or transportation.
8. No plants shall be installed unless the City of Harrisonburg and/or Engineer approves both the condition of the plantings and the process of installation.

B. Substitute Plant Material

1. Prior to Contractor mobilization, the City of Harrisonburg and/or Engineer must approve all plant substitutions.
2. If a substitute is selected, it must be native to the Ridge & Valley physiographic province of Virginia and of the same size, value, and quality as the original plant.

C. Water

Water used in the establishment or caring of plants and seed shall be free from any substance that is injurious to plant life.

D. Fertilizer

1. No broadcast fertilization shall be permitted on stream restoration projects unless specifically noted in Construction Drawings.
2. The Contractor shall use organic fertilizers in lieu of petroleum-based fertilizers.

Suitable products that are commercially available are marketed and certified as 'organic' or 'natural' fertilizers. Organic Materials shall include such items as sea grasses/kelp, Boulder powder, bone meal, whey, bean meal, blood meal, composted manure, etc. Product nutrient content shall be identified in the standard form of Nitrogen (N), Phosphorous (P), and Potassium (K) ratios. Fertilizer nutrient content shall be 20-10-5. The application rate shall be equivalent to a 5-gram tablet per plant. Contractor shall submit the label to the City of Harrisonburg and/or Engineer for review prior to installation. The City of Harrisonburg and/or Engineer must approve any proposed substitution to this nutrient content.

E. Mycorrhizal Fungi

All bare root seedlings shall be treated with root dip absorbent polymers and mycorrhizal root dip inoculates in accordance with the manufacturer's recommendations.

F. Straw Mulch

Straw mulch shall consist of un-rotten, small grain straw.

G. Topsoil – See Special Provision – Topsoil

H. Compost – See Special Provision - Compost

3. Construction

A. All areas shall be planted in accordance with the composition and planting schedules for each designated planting zone. Areas within designated planting zones not disturbed by Construction shall be supplemented with trees and shrubs to meet the acre quantities specified in the schedule.

B. The Contractor shall refer to the planting plan, vegetation schedule, planting details, and notes in the Construction Drawings for specific spacing requirements.

C. The Contractor shall use the overall spacing requirements and the Planting Notes and Details in the Construction Drawings to determine the spacing between each species of vegetation and among the same species of vegetation.

D. Immediately after site preparation and approval , container trees and shrubs and herbaceous plugs shall be planted. Containerized plants shall be installed between September 30 and March 31, or as directed by the City of Harrisonburg and/or Engineer. Herbaceous Plugs shall be planted between September 30 and March 31. No planting shall occur when soil is frozen.

E. Root stock of the plant material shall be kept moist during transport from the source to the job site and until planted.

F. The Contractor may be required to flag and label individual planting pits at specific locations. Upon planting a typical area within each planting zone, the Contractor shall

have the City of Harrisonburg and/or Engineer inspect and approve plant spacing and planting techniques before proceeding.

G. All planting pits shall be dug by hand. Walls of planting pits shall be dug so that they are vertical or sloping outward in heavy soils. Scarify the walls of the pit after digging.

H. Excavate the planting pit to a depth of 1 foot plus the container depth in which the plant was grown and 2 feet wider than the container.

I. Planting holes for bare root trees shall be 1-2 inches deeper than the root collar (i.e. 1-2 inches deeper than they were growing in the nursery). Bare root seedlings shall be installed with the use of a "dibble planting method".

J. Remove all non-organic debris from the pit and tamp loose soil in the bottom of the pit by hand.

K. Remove the plant either by cutting or inverting the container.

L. Do not handle the plant by the branches, leaves, trunk, or stem.

M. Place the plant straight in the center of the planting pit, carrying the plant by the root mass. Never lift or carry a plant by the trunk or branches.

N. Place controlled release fertilizer in the planting hole in accordance with Section 16.2.D of these specifications (above).

O. Treat all bare root seedlings with root dip absorbent polymers and mycorrhizal root dip inoculates in accordance with the manufacturer's recommendations.

P. Backfill planting pit with existing soil and hand tamp as pit is being backfilled to completely fill all voids and air pockets. Do not over compact soil. Make sure plant remains straight during backfilling/tamping procedure.

Q. Do not cover the top of the root mass with soil.

R. An additional 18-inch diameter area of topsoil shall be placed around each tree and shrub. Topsoil shall be 2 inches thick.

S. Water plants thoroughly immediately after planting, unless otherwise directed by the City of Harrisonburg and/or Engineer.

T. City of Harrisonburg and/or Engineer reserves the right to require supplemental watering during Construction or during the first growing season after substantial completion, at their sole discretion. Such watering may be required, for example, if plant Materials are installed outside the approved planting window or in areas where vegetative establishment does not provide adequate cover (85% min.) to protect against erosion. Supplemental watering shall be done using a submersible-style pump to pump water from an adjacent pool whenever possible to avoid damage associated

with vehicular access. Any such supplemental watering shall be at the Contractor's expense, not subject to change order requests.

U. The Contractor shall leave no open planting pits at the close of each day.

V. Remove all tags, labels, strings, and wire from the plant Materials, unless otherwise directed by the City of Harrisonburg and/or Engineer.

4. Warranty

A. The Contractor shall maintain a one (1) year care and replacement warranty of 85% on all B&B, container grown, and Herbaceous Plugs.

B. The period of care and replacement shall begin after final inspection and approval of the initial installation of all plants and continue for 1 year, with a potential plant replacement period after the year warranty inspection.

C. Plant warranty replacements shall be performed in accordance with the Construction Drawings and these specifications.

5. Measurement and Payment

Planting trees, shrubs, and herbaceous plugs shall be measured and paid for at the Contract unit price per each (EA) plant in accordance with the plant schedule and planting plan. Payment shall be full compensation for furnishing, installing, maintenance, and warranty, including all Materials, labor, equipment, stockpiling, tools, and incidentals necessary to complete the work as specified in the Construction Drawings, or as directed by the City of Harrisonburg and/or Engineer.

Special Provision 28: Live Stakes

1. Description

A. This work shall consist of furnishing, transporting, storing, and installing live stakes to complete the work for the planting plan as specified in the Construction Drawings, or as directed by the City of Harrisonburg and/or Engineer.

2. Materials

A. Live staking plant material shall consist of species shown in the contract drawings.

B. All plant material shall be harvested locally (within the same physiographic Ecoregion and plant hardiness zone) or purchased from a local nursery, with the approval of the City of Harrisonburg and/or Engineer.

C. During preparation, the basal ends of the live stakes shall be cleanly cut at an angle to facilitate easy insertion into the soil, and the tops shall be cut square or blunt for tamping. All limbs shall be removed from the sides of the live cutting prior to

installation.

3. Construction

A. Live stakes shall be harvested in a manner such that they are cut and then planted immediately. Cuttings shall remain wet until they are planted. Outside storage locations should be continually shaded and protected from wind and direct sunlight.

B. Live stakes shall be tamped perpendicularly into the finished bank slope with a dead blow hammer, with buds oriented in an upward direction. Stakes shall be installed with approximately 3" of stake remaining above ground.

C. The area around each live stake shall be compacted by foot after the live stake has been installed.

D. Live stakes shall be installed according to the configuration presented in the details of the plan sheets.

E. Any stakes that are split or damaged during installation shall be removed and replaced.

4. Warranty

A. The Contractor shall maintain a one (1) year care and replacement warranty of 85% on all live stakes.

B. The period of care and replacement shall begin after final inspection and approval of the initial installation of all plants and continue for 2 years, with a potential plant replacement period after the year warranty inspection.

C. Plant warranty replacements shall be performed in accordance with the Construction Drawings and these specifications.

5. Measurement and Payment

Planting live stakes shall be measured and paid for at the Contract unit price per each (EA) plant in accordance with the plant schedule and planting plan. Payment shall be full compensation for furnishing, installing, maintenance, and warranty, including all Materials, labor, equipment, stockpiling, tools, and incidentals necessary to complete the work as specified in the Construction Drawings, or as directed by the City of Harrisonburg and/or Engineer.

Special Provision 29: Permanent Seeding & Temporary Seeding

1. Description

A. This work shall consist of furnishing, transporting, storing, and installing temporary and permanent seeding for the Planting Zones as specified in the Construction Drawings, or as directed by the City of Harrisonburg and/or Engineer.

B. Prior to start of work on this item, the Contractor shall submit temporary and permanent seeding paperwork, to include shipping invoices, seed bag tickets for the seed mixes to be installed, and the source of the seed to the City of Harrisonburg for review. No work shall be performed until the seeding paperwork is approved by the City of Harrisonburg and/or Engineer.

2. Materials

A. Seed Mix

Seed Mix shall consist of the varieties specified in the vegetation schedule located within the Construction Drawings for all planting zones. All seed and seed varieties shall be free from State and Federal prohibited noxious weed seeds.

B. Topsoil – See Special Provision- Topsoil.

C. Straw Mulch

Straw mulch shall consist of un-rotten small grain straw.

D. Water

Water used in the establishment or caring of plants and seed shall be free from any substance that is injurious to plant life.

3. Construction

A. All areas disturbed by Construction shall be seeded in accordance with the planting plans and schedules. The riparian and non-riparian temporary and permanent seeding seeding is specified on the planting schedules in the Construction Drawings. Areas not disturbed, shall not be seeded.

B. All areas to be seeded shall conform to the finished grades as specified on the plans and be free of all weeds, trash, debris, brush, clods, loose Boulders, and other foreign that would interfere with seeding. All gullies, washes, or disturbed areas that develop after final dressing shall be repaired prior to seeding.

C. Seed shall be spread immediately following fine grading of an area, as Construction progresses, to achieve rapid germination and stabilization. After seeding and raking, the Contractor shall cover the seeded areas with straw mulch, as indicated in the Construction Drawings. No seed shall be spread on top of straw or natural fiber matting.

D. At the sole discretion of the City of Harrisonburg and/or Engineer, additional seeding may be required in areas where poor vegetative establishment is observed (less than 85% surface coverage). Additional seeding may be requested at any time prior to substantial completion or in association with planting inspections during the two-year warranty period. Additional seeding shall be considered within the original contract scope and shall not be subject to change order request.

4. Warranty

A. The period of care and replacement shall begin after final inspection and approval of the initial installation of all plants and continue for one (1) year.

B. Riparian and non-riparian temporary and permanent seeding warranty replacements shall be performed in accordance with the Construction Drawings and these specifications.

5. Measurement and Payment

Permanent seeding and temprorary seeding shall be measured and paid for on a per acre (AC) basis. Payment will be full compensation for furnishing and incorporating all seed, including all maintenance and warranty, Materials, labor, equipment, tools, and incidentals necessary to complete the work as specified in the Construction Drawings, or as directed by the City of Harrisonburg and/or Engineer. The Contractor shall maintain a minimum 85% aerial coverage of herbaceous seeding for one (1) year after final inspection. This shall include necessary care and replacement to achieve the required coverage.

Special Provision 30: Invasive Species Removal

1. Description

A. To prevent the spread or establishment of invasive species the Contractor shall remove invasive plant species within specified areas of the Limits of Disturbance (LOD) as depicted in the Construction plans during the clearing operations. Species to be treated include but are not limited to Japanese Hops (*Humulus japonicus*) and Chinese Privet (*Ligustrum sinense*).

B. The scope of work for this item shall include:

1. Existing invasive plant species will be removed within the limits of disturbance (LOD) as depicted on the Construction plans.

2. The bid for this contract item should include all resources necessary to control non-native invasive species within the project limits of disturbance in accordance with the standards set forth below.

2. Implementation

A. Identification - The approximate locations of observed Invasive and Highly Invasive plant species, specified above, and their relative abundance will be identified on a site map.

B. Control - Specific methods to control the invasive plant species specified above and on the Virginia Department of Conservation and Recreation Natural Heritage Program Virginia Invasive Plant Species List, will be dependent upon the relative abundance of the species identified. Proposed control methods may include manual, mechanical, biological, and/or chemical methods. Manual removal with the excavator during clearing operaions is acceptable.

C. Control Plan - The proposed control plan shall be submitted to City staff for authorization prior to its implementation. The recommended method of control for an identified invasive plant species will then be performed by the Contractor, as needed based on current accepted and effective control methods. If chemical or biological control methods are to be implemented, the Contractor shall ensure all required applicator certifications and regulations are followed. If physical removal is implemented, the Contractor shall ensure the plant Materials are disposed of completely and responsibly.

3. Warranty

A. The warranty period shall be equal to that for planted Materials.

B. For the purposes of this warranty, one year shall include one full growing season. For example, if the Contractor plants in the fall/winter 2019, the warranty period runs through fall/winter 2020. However, in no case shall the warranty period be less than twelve (12) full months beginning with the date of final planting inspection and approval.

4. Measurement and Payment

Invasive Species Removal shall be measured and paid for as a lump sum (LS) item. The payment will be full compensation for transport of all Materials, excavation, and for all material, labor, equipment, tools, and incidentals necessary to complete the work as specified in the Contract Documents, or as directed by the City of Harrisonburg and/or Engineer.

Section 6: Construction Tolerances and Oversight

Special Provision 31: Construction Tolerances

1. Description

All stream work shall be performed such that the finished product adheres to the stream restoration Construction tolerances contained herein. The Contractor is solely responsible for ensuring the finished product meets the tolerances. The City of Harrisonburg and/or Engineer staff shall issue final approval and acceptance.

2. Specifications

A. Locations, elevations, and dimensions of all structures and channel features shall constructed within the tolerances provide below:

Vertical tolerance	+/- 0.1 ft maximum
Horizontal tolerance	+/- 0.5 ft maximum

B. It is recognized that field conditions may warrant adjustments to design elements (such an adjustment requires the prior written approval of the City of Harrisonburg and/or Engineer staff). In addition, certain design elements that fail to meet the above listed tolerances may be acceptable. Such acceptance will be on a case-by-case basis by the City of Harrisonburg and/or Engineer staff. The Contractor is encouraged to identify these cases with the Consultant during Construction and keep a record of changes or modifications.

Special Provision 32: Construction Oversight

1. Description

Construction Oversight shall be conducted by both the City of Harrisonburg and/or Engineer and the firm which produced the Construction Drawings, Ecosystem Services (ES).

2. Measurement and Payment

Construction oversight and management services shall be performed under a separate contract and shall not be a pay item paid to the Contractor.

Special Provision 33: As-Built Survey

1. Description

The Contractor shall prepare and submit a certified as-built survey of the completed stream restoration Construction to fully illustrate all completed Construction within the established LOD. The contractor shall also submit daily, non-certified, as-built surveys and

field Construction notes for all in-stream structures and channel dimensions at each proposed cross section extended from the channel to the LOD on both sides of the proposed channel.

Survey and preparation of final certified as-built documents may be contracted with a third-party consultant. This does not relieve the Contractor of daily non-certified as-built survey obligations/grade check notes and notifications as described in the Construction section below.

2. Materials

A. During Construction, the Contractor shall adhere to tolerances noted in the "Stream Construction Tolerances" section of this document.

B. The as-built survey shall be a reproducible mylar copy of the approved Contract Documents (existing base files to be obtained electronically from the City of Harrisonburg). The as-built survey shall be certified by a Land Surveyor licensed to practice in the Commonwealth of Virginia. The as-built survey shall include the following features:

1. Verification of information in geometry plan and notation of any changes.

2. Verification of information in structure tables to include horizontal and vertical as-built condition of all in-stream structures, including perimeter of each structure, 3 dimensional locations (x, y, and z) of each node called out on design plans (as per the structure placement tables) of each in-stream structure, and any difference between the proposed and as-built vertical and horizontal condition.

3. Topographic as-built survey over the extent of all constructed bank stabilization/restoration and grading. Shots shall be sampled and reported at no less density than 50' grid, and sufficient to show break lines and grade changes at 1foot contour intervals.

4. Vertical as-built survey of the proposed longitudinal profile of the stream thalweg (or design centerline alignment) at grade breaks to show the as-built riffle, run, pool, and glide elevations of the restored channel, as shown in the proposed longitudinal profile and cross sections, and at design stations and locations of revisions approved during Construction.

5. Horizontal and vertical as-built survey of each proposed cross section, to include all proposed in-channel grading and structures, top of bench and bench limits (if in bench section), top of stream bank, and all topographic features outside of the stream channel extended to the LOD on both sides of the channel at the station of every proposed cross section and at a minimum of every fifty (50) feet along the proposed stream stationing.

C. The signed, sealed and certified reproducible mylar of the as-built survey drawings along with 3 print copies shall be generated by the Contractor and submitted to the City of Harrisonburg.

3. Construction

A. The Contractor shall provide daily, non-certified, as-built surveys in the form of "Construction Foreman's GRADE CHECK NOTES" to the CMD Inspector and/or City Staff on site. The GRADE CHECK NOTES shall show the as-built elevations are in conformance (within specified tolerances) with the proposed elevations at all nodes shown in the structure tables and all proposed in-channel grading, top of bench and bench limits (if in bench section), top of stream bank, and all proposed topographic features outside of the stream channel extended to the LOD on both sides of the channel, as shown in the grading plans, proposed cross sections and longitudinal profile.

B. The Contractor shall notify the City of Harrisonburg a minimum of 2 weeks prior to completion of Construction activities.

C. The Contractor shall document the certified as-built condition of the constructed design concurrent with Construction so that the certified as-built survey is complete and submitted to the City of Harrisonburg for approval prior to demobilization, no longer than four (4) weeks following final Construction activities.

D. Any errors or omissions found during the course of the as-built survey and determined by the City of Harrisonburg, who shall be the sole judge, to have occurred during Construction shall be repaired by the Contractor to the satisfaction of the City of Harrisonburg at no additional expense to the Ctiy. The Contractor shall make any necessary repairs or corrections required by the City of Harrisonburg including grading, adjustment of stream restoration structures, etc. Upon completion of corrective action, the Contractor shall re-survey the problem area showing the original as-built information and any modification highlighted and noted. A Land Surveyor licensed to practice in the Commonwealth of Virginia shall also seal the re-survey.

E. Final acceptance of the project by the City of Harrisonburg shall not occur until the certified as-built has been completed for the entire project and approved by the City of Harrisonburg.

4. Maintenance

A. The Contractor will be held fully responsible for maintaining the project during Construction including the period of the as-built certification.

B. The Contractor shall be held responsible for maintaining the integrity of the project until final acceptance of the as-built survey and a determination by the City of Harrisonburgthat no errors or omissions have been made by the Contractor during the course of Construction. The City of Harrisonburgshall make every effort to notify the Contractor within 3 weeks of receipt of the as- built survey as to the acceptability or rejection of the Construction of the stream restoration project; however, lapse of this time frame does not relieve the Contractor of responsibility for maintaining the integrity of the project or for correcting any errors/omissions until final acceptance of the certified as-built for the entire stream restoration project.

5. Measurement and Payment

Preparation of the as-built survey and certification will be measured and paid for as a lump sum (LS) item. The payment will be full compensation for surveying, preparation of as-built survey, and for the Licensed Surveyor to seal the as-built survey. Payment shall include all Materials, labor, equipment, stockpiling, tools, maintenance, additional as-built survey required upon completion of corrective action as noted in section 3.D, and any incidental costs necessary to complete the work specified in the Contract Documents, or as directed by the City of Harrisonburg.

Appendix A: Mt. View Drive Stream Restoration Engineering Plans

A

Appendix B: Invasive Species Map

A

INVASIVE PLANT SPECIES INVENTORY				
INVASIVE SPECIES DESCRIPTION	SCIENTIFIC NAME	COMMON NAME	VA DCR INVASIVENESS RANK	ON-SITE RELATIVE ABUNDANCE
Invasive Community 1	*Ailanthus altissima*	Tree of Heaven	High	Pervasive
	Pyrus calleryana	Bradford Pear	Medium	Sparce
	Lonicera maackii	Amur Honeysuckle	High	Pervasive/Dense
	Lonicera japonica	Japanese Honeysuckle	High	Abundant
Invasive Community 2	*Rosa multiflora*	Multiflora Rose	High	Abundant
	Securigera varia	Crown Vetch	Low	Pervasive

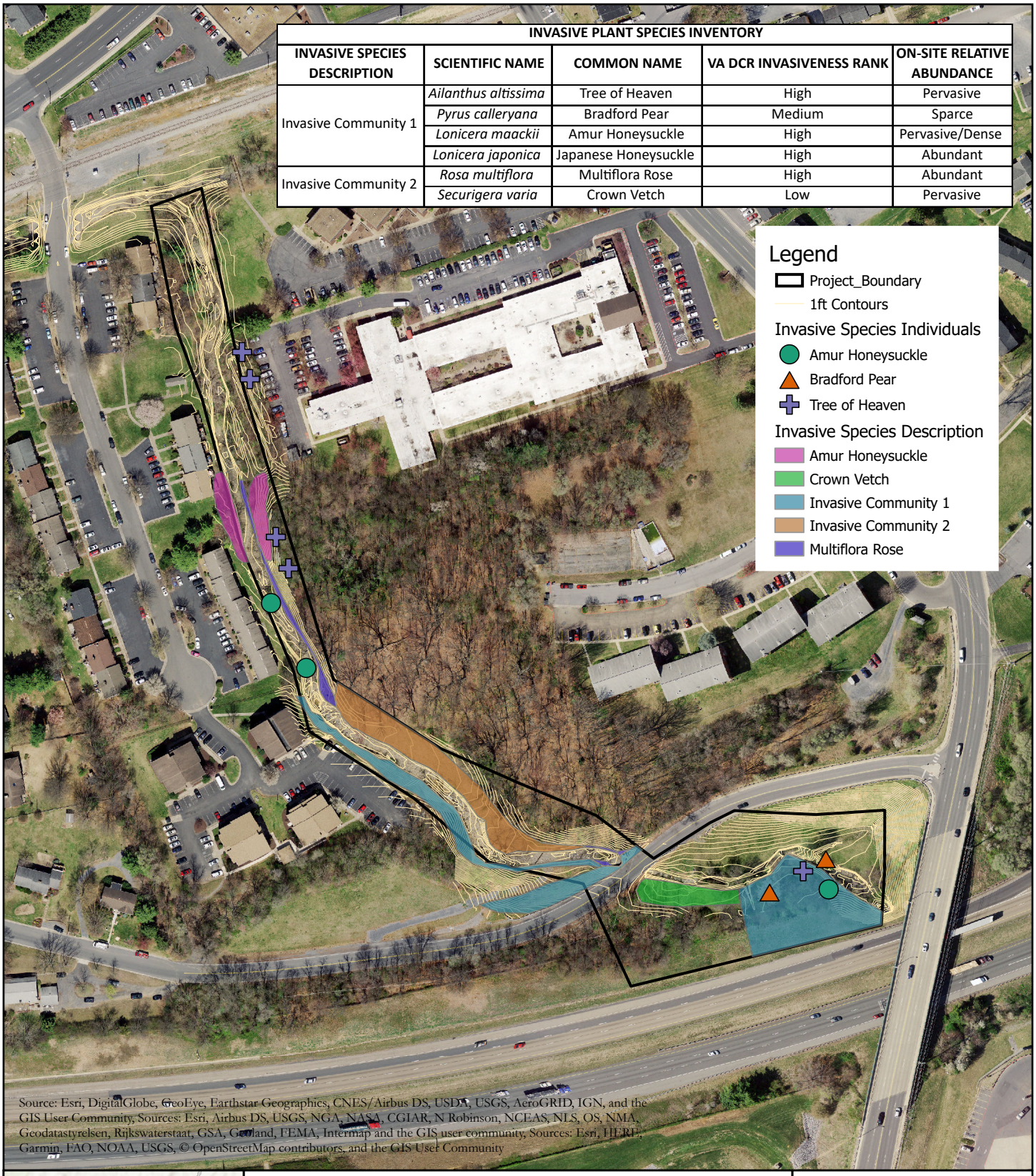

INVASIVE SPECIES MAP

Mountain View Drive Stream Restoration

ECOSYSTEM SERVICES | HARRISONBURG, VA

N

0 100 200 US Feet

1739A Allied Street Charlottesville, VA 22903 | 540.239.1428 | www.ecosystemservices.us